FOREWORD

This handbook contains information on the Triumph Sprint ST and Sprint ST ABS motorcycles. Always store this owner's handbook with the motorcycle and refer to it for information whenever necessary.

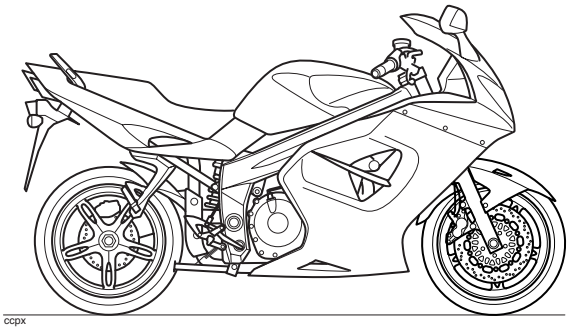

Warnings, Cautions and Notes

Throughout this owner's handbook particularly important information is presented in the following form:

Warning

This warning symbol identifies special instructions or procedures, which, if not correctly followed, could result in personal injury, or loss of life.

Caution

This caution symbol identifies special instructions or procedures, which, if not strictly observed, could result in damage to, or destruction of, equipment.

Note:

- **This note symbol indicates points of particular interest for more efficient and convenient operation.**

Foreword

Warning Labels

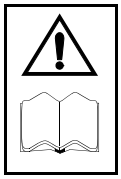

At certain areas of the motorcycle, the symbol (left) can be seen. The symbol means 'CAUTION: REFER TO THE HANDBOOK' and will be followed by a pictorial representation of the subject concerned.

Never attempt to ride the motorcycle or make any adjustments without reference to the relevant instructions contained in this handbook.

See pages *10* and *11* for the location of all labels bearing this symbol. Where necessary, this symbol will also appear on the pages containing the relevant information.

Maintenance

To ensure a long, safe and trouble free life for your motorcycle, maintenance should only be carried out by an authorised Triumph dealer.

Only an authorised Triumph dealer will have the necessary knowledge, equipment and skills to maintain your Triumph motorcycle correctly.

To locate your nearest Triumph dealer, visit the Triumph web site at www.triumph.co.uk or telephone the authorised distributor in your country. Their address is given in the service record book that accompanies this handbook.

Noise Control System

Tampering with the Noise Control System is Prohibited.

Owners are warned that the law may prohibit:

a) The removal or rendering inoperative by any person other than for purposes of maintenance, repair or replacement, of any device or element of design incorporated into any new vehicle for the purpose of noise control prior to its sale or delivery to the ultimate purchaser or while it is in use and,

b) the use of the vehicle after such device or element of design has been removed or rendered inoperative by any person.

Owner's Handbook

Thank you for choosing a Triumph motorcycle. This motorcycle is the product of Triumph's use of proven engineering, exhaustive testing, and continuous striving for superior reliability, safety and performance.

Please read this owner's handbook before riding in order to become thoroughly familiar with the correct operation of your motorcycle's controls, its features, capabilities and limitations.

This handbook includes safe riding tips, but does not contain all the techniques and skills necessary to ride a motorcycle safely.

Triumph strongly recommends that all riders undertake the necessary training to ensure safe operation of this motorcycle.

Warning

This owner's handbook, and all other instructions that are supplied with your motorcycle, should be considered a permanent part of your motorcycle and should remain with it even if your motorcycle is subsequently sold.

All riders must read this owner's handbook and all other instructions which are supplied with your motorcycle, before riding, in order to become thoroughly familiar with the correct operation of your motorcycle's controls, its features, capabilities and limitations. Do not lend your motorcycle to others as riding when not familiar with your motorcycle's controls, features, capabilities and limitations can lead to an accident.

Information

The information contained in this publication is based on the latest information available at the time of printing. Triumph reserves the right to make changes at any time without prior notice, or obligation.

Not to be reproduced wholly or in part without the written permission of Triumph Motorcycles Limited.

© Copyright 04.2008 Triumph Motorcycles Limited, Hinckley, Leicestershire, England.

Publication part number 3851501 issue 5.

Foreword

Table of Contents

This handbook contains a number of different sections. The table of contents below will help you find the beginning of each section where, in the case of the major sections, a further table of contents will help you find the specific subject required.

Foreword 1

Warning Labels 10

Parts Identification 12

Serial Numbers 15

General Information 17

How to Ride the Motorcycle 45

Accessories, Loading and Passengers 57

Maintenance and Adjustment 61

Storage 107

Specifications 109

FOREWORD - SAFETY FIRST

The Motorcycle

Warning

This motorcycle is designed for on-road use only. It is not suitable for off-road use.

Off-road operation could lead to loss of control of the motorcycle resulting in an accident causing injury or loss of life.

Warning

This motorcycle is not designed to tow a trailer or be fitted with a sidecar. Fitting a sidecar and/or a trailer may result in loss of control and an accident.

Warning

This motorcycle is designed for use as a two-wheeled vehicle capable of carrying a rider on his/her own, or a rider and one passenger (subject to a passenger seat being fitted).

The total weight of the rider, and any passenger, accessories and luggage must not exceed the maximum load limit of 215 kg.

Fuel and Exhaust Fumes

Warning

PETROL IS HIGHLY FLAMMABLE:

Always turn off the engine when refuelling.

Do not refuel or open the fuel filler cap while smoking or in the vicinity of any open (naked) flame.

Take care not to spill any petrol on the engine, exhaust pipes or silencers when refuelling.

If petrol is swallowed, inhaled or allowed to get into the eyes, seek immediate medical attention.

Spillage on the skin should be immediately washed off with soap and water and clothing contaminated with petrol should immediately be removed.

Burns and other serious skin conditions may result from contact with petrol.

Warning

Never start your engine or let it run for any length of time in a closed area. The exhaust fumes are poisonous and may cause loss of consciousness and death within a short time. Always operate your motorcycle in the open-air or in an area with adequate ventilation.

Riding

Warning

Never ride the motorcycle when fatigued or under the influence of alcohol or other drugs.

Riding when under the influence of alcohol or other drugs is illegal.

Riding when fatigued or under the influence of alcohol or other drugs reduces the rider's ability to maintain control of the motorcycle and may lead to loss of control and an accident.

Warning

All riders must be licenced to operate the motorcycle. Operation of the motorcycle without a licence is illegal and could lead to prosecution.

Operation of the motorcycle without formal training in the correct riding techniques that are necessary to become licenced is dangerous and may lead to loss of motorcycle control and an accident.

Warning

Always ride defensively and wear the protective equipment mentioned elsewhere in this foreword. Remember, in an accident, a motorcycle does not give the same impact protection as a car.

Warning

This Triumph motorcycle should be operated within the legal speed limits for the particular road travelled. Operating a motorcycle at high speeds can be potentially dangerous since the time available to react to given traffic situations is greatly reduced as road speed increases. Always reduce speed in potentially hazardous driving conditions such as bad weather or heavy traffic.

Warning

Continually observe and react to changes in road surface, traffic and wind conditions. All two-wheeled vehicles are subject to external forces which may cause an accident. These forces include but are not limited to:

- Wind draft from passing vehicles;
- Potholes, uneven or damaged road surfaces;
- Bad weather;
- Rider error.

Always operate the motorcycle at moderate speed and away from heavy traffic until you have become thoroughly familiar with its handling and operating characteristics. Never exceed the legal speed limit.

Helmet and Clothing

Warning

When riding the motorcycle, both rider and passenger must always wear a motorcycle helmet, eye protection, gloves, trousers (close fitting around the knee and ankle) and a brightly coloured jacket. Brightly coloured clothing will considerably increase a rider's (or passenger's) visibility to other operators of road vehicles. Although full protection is not possible, wearing correct protective clothing can reduce the risk of injury when riding.

Warning

A helmet is one of the most important pieces of riding gear as it offers protection against head injuries. You and your passenger's helmet should be carefully chosen and should fit you or your passenger's head comfortably and securely. A brightly coloured helmet will increase a rider's (or passenger's) visibility to other operators of road vehicles.

An open face helmet offers some protection in an accident though a full face helmet will offer more.

Always wear a visor or approved goggles to help vision and to protect your eyes.

cbma

Handlebars and Footrests

Warning

The rider must maintain control of the vehicle by keeping hands on the handlebars at all times.

The handling and stability of a motorcycle will be adversely affected if the rider removes his hands from the handlebars, resulting in loss of motorcycle control and an accident.

Warning

The rider and passenger must always use the footrests provided, during operation of the vehicle.

By using the footrests, both rider and passenger will reduce the risk of inadvertent contact with any motorcycle components and will also reduce the risk of injury from entrapment of clothing.

Parking

Warning

Always turn off the engine and remove the ignition key before leaving the motorcycle unattended. By removing the key, the risk of use of the motorcycle by unauthorised or untrained persons is reduced.

When parking the motorcycle, always remember the following:

Engage first gear to help prevent the motorcycle from rolling off the stand.

The engine and exhaust system will be hot after riding. DO NOT park where pedestrians, animals and/or children are likely to touch the motorcycle.

Do not park on soft ground or on a steeply inclined surface. Parking under these conditions may cause the motorcycle to fall over.

For further details, please refer to the 'How to Ride the Motorcycle' section of this owner's handbook.

Parts and Accessories

Warning

Owners should be aware that the only approved parts, accessories and conversions for any Triumph motorcycle are those which carry official Triumph approval and are fitted to the motorcycle by an authorised dealer.

In particular, it is extremely hazardous to fit or replace parts or accessories whose fitting requires the dismantling of, or addition to, either the electrical or fuel systems and any such modification could cause a safety hazard.

The fitting of any non-approved parts, accessories or conversions may adversely affect the handling, stability or other aspect of the motorcycle operation that may result in an accident causing injury or death.

Triumph does not accept any liability whatsoever for defects caused by the fitting of non-approved parts, accessories or conversions or the fitting of any approved parts, accessories or conversions by non-approved personnel.

Maintenance/Equipment

Warning

Consult your authorised Triumph dealer whenever there is doubt as to the correct or safe operation of this Triumph motorcycle.

Remember that continued operation of an incorrectly performing motorcycle may aggravate a fault and may also compromise safety.

Warning

Use of a motorcycle with bank angle indicators worn beyond the maximum limit (when 5 mm of the bank indicator remains) will allow the motorcycle to be banked to an unsafe angle.

Banking to an unsafe angle may cause instability, loss of motorcycle control and an accident.

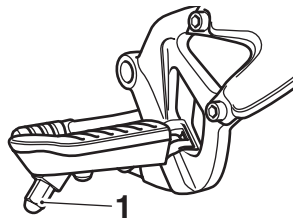

ccsm

1. **Bank angle indicator**

Warning

Ensure all equipment that is required by law is installed and functioning correctly. The removal or alteration of the motorcycle's lights, silencers, emission or noise control systems can violate the law. Incorrect or improper modification may adversely affect the handling, stability or other aspect of the motorcycle operation, which may result in an accident causing injury or death.

Warning

If the motorcycle is involved in an accident, collision or fall, it must be taken to an authorised Triumph dealer for inspection and repair. Any accident can cause damage to the motorcycle that, if not correctly repaired, may cause a second accident that may result in injury or death.

WARNING LABELS

The labels detailed on this and the following pages draw your attention to important safety information in this handbook. Before riding, ensure that all riders have understood and complied with all the information to which these labels relate.

Warning Label Locations

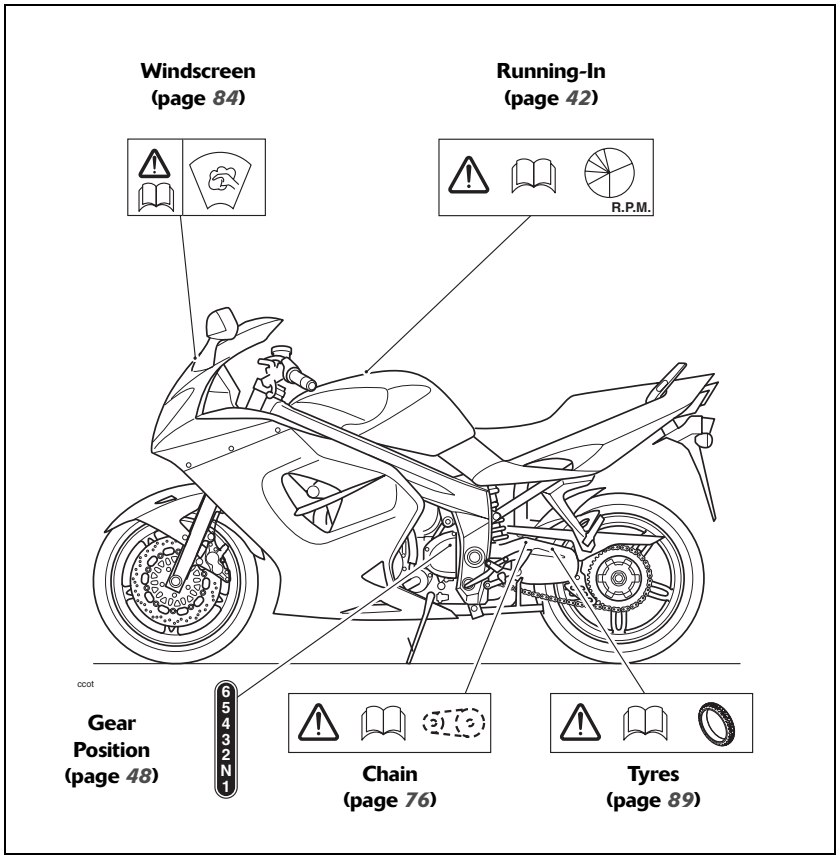

Warning Label Locations (continued)

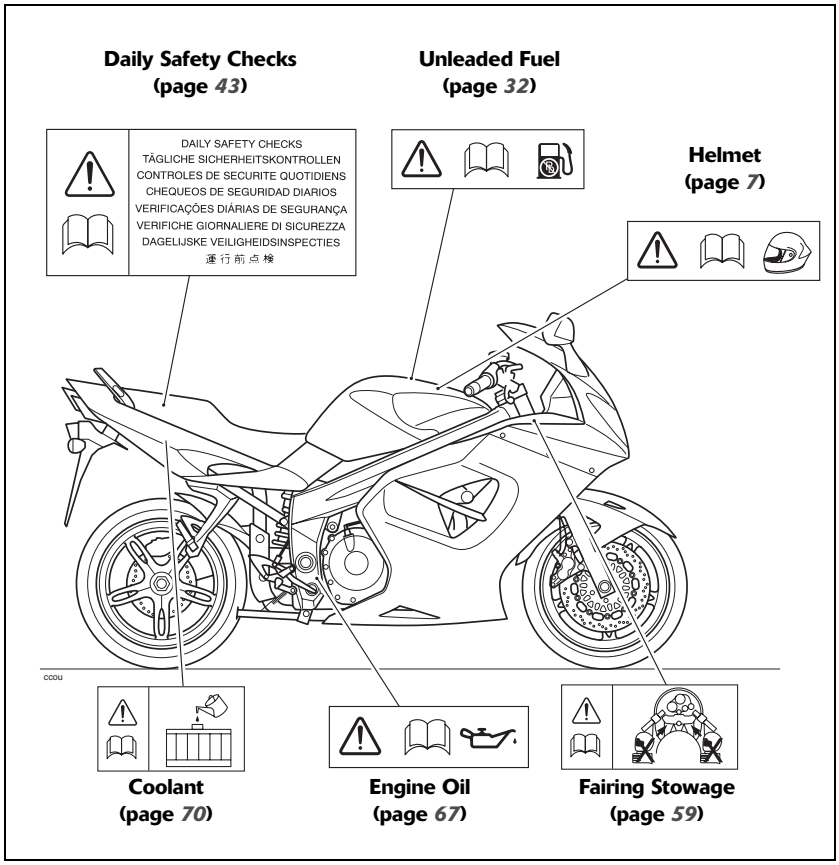

PARTS IDENTIFICATION

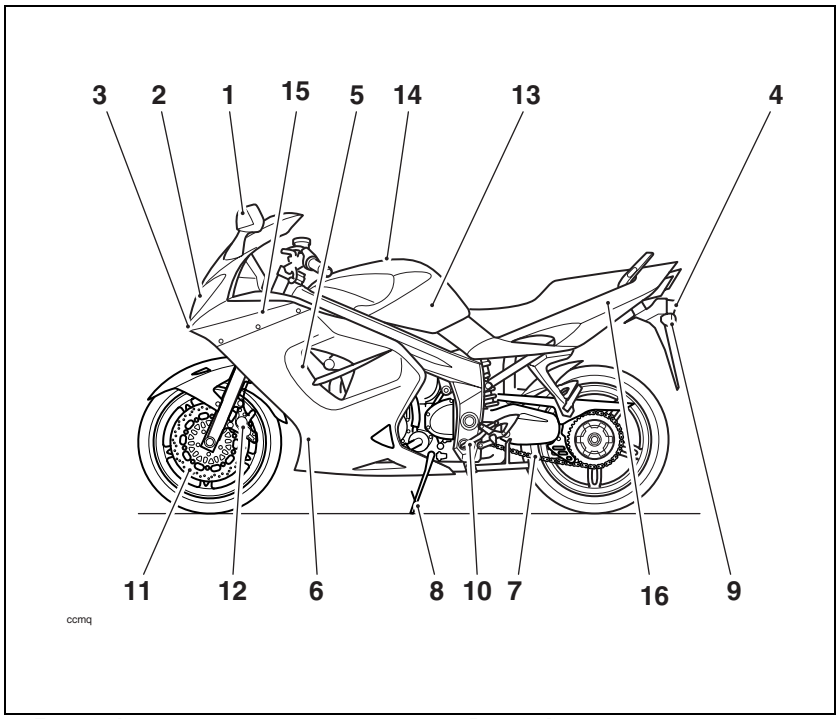

1. Front indicator
2. Headlight
3. Position lamp
4. Rear light
5. Radiator/Coolant pressure cap
6. Oil cooler
7. Drive chain
8. Side stand
9. Rear indicator
10. Gear-change pedal
11. Front brake disc
12. Front brake caliper
13. Fuel tank
14. Fuel filler cap
15. Coolant expansion tank
16. Silencer

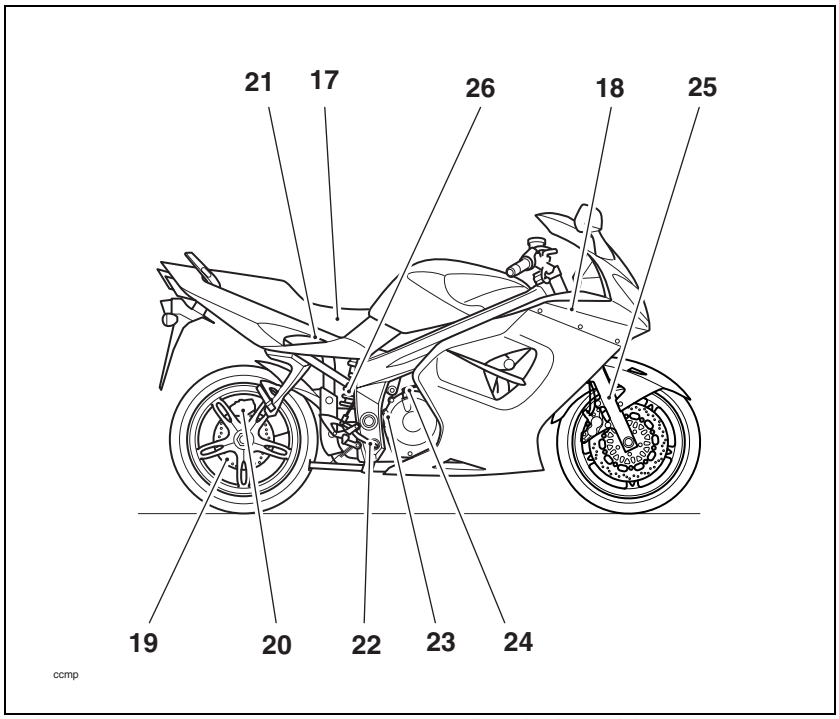

17. Battery
18. Tool kit
19. Rear brake disc
20. Rear brake caliper
21. Rear brake fluid reservoir
22. Rear brake pedal
23. Oil filler cap/Dipstick
24. Clutch cable
25. Front fork
26. Rear suspension unit

Parts Identification (continued)

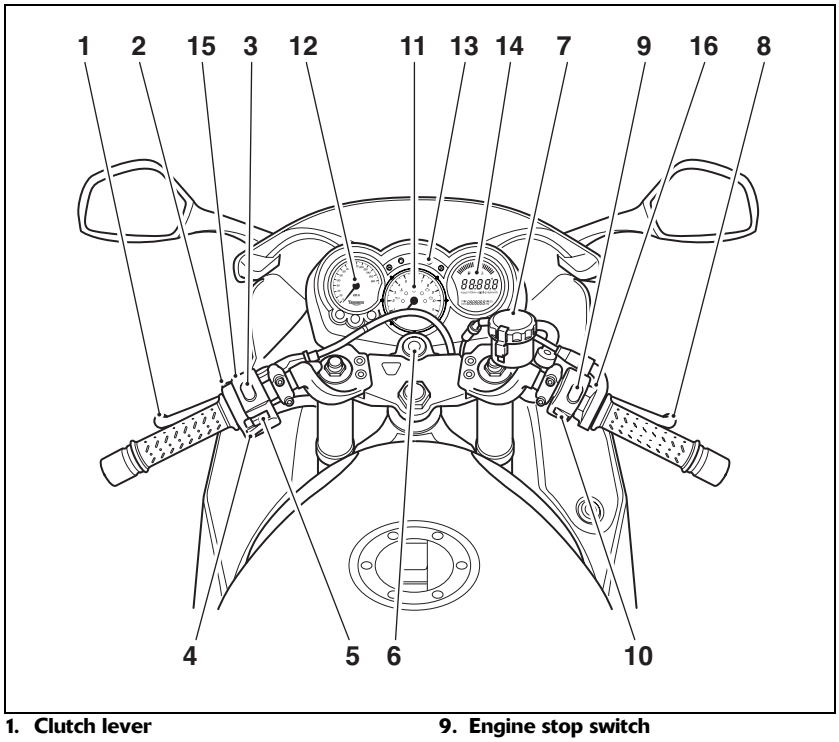

1. Clutch lever
2. Passing button
3. Headlight dip switch
4. Horn button
5. Direction indicator switch
6. Ignition switch
7. Front brake fluid reservoir
8. Front brake lever
9. Engine stop switch
10. Starter button
11. Tachometer
12. Speedometer
13. Warning lights
14. Trip computer
15. Clutch lever adjuster
16. Brake lever adjuster

SERIAL NUMBERS

Vehicle Identification Number (VIN)

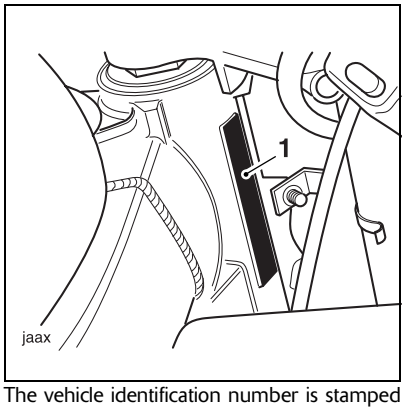

The vehicle identification number is stamped into the steering head area of the frame. It is also displayed on a plate, riveted to the frame, immediately behind the steering head.

Record the vehicle identification number in the space below.

Engine Serial Number

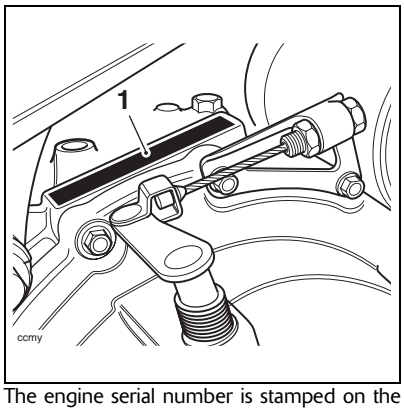

The engine serial number is stamped on the engine crankcase, immediately above the clutch cover.

Record the engine serial number in the space provided below.

This page intentionally left blank

GENERAL INFORMATION

Table of Contents

Instrument Panel Layout. 19
Speedometer 20
Tachometer 20
Odometer/Trip Meter. 20
Clock/Trip Computer 21
Instantaneous Fuel Consumption 21
Average Fuel Consumption 21
Range. 21
Journey Distance 21
Journey Time 21
Average Speed 21
Maximum Speed 21
Trip Computer Operation 21
Trip Computer Reset 22
Clock Adjustment 22
Coolant Temperature Gauge 23
Fuel Gauge 24
Warning Lights 25
Direction Indicators 25
High Beam. 25
Low Fuel. 25
Neutral 25
Low Oil Pressure Warning Light. 25
High Coolant Temperature Warning Light. 25
Engine Management System Malfunction Indicator Light 26
ABS (Anti-Lock Brake System) Indicator Light 26
Alarm Indicator Light. 26
Ignition Key. 27
Ignition Switch/Steering Lock. 28
Ignition Switch Positions 28

General Information

Brake and Clutch Lever Adjusters 29

Right Handlebar Switches 30
- Engine Stop Switch 30
- Starter Button 30

Left Handlebar Switches. 31
- Headlight Dip Switch. 31
- Direction Indicator Switch 31
- Horn Button. 31
- Pass Button 31

Fuel Requirement/Refuelling 32
- Fuel Grade. 32
- Fuel Tank Cap 33
- Filling the Fuel Tank. 33

Stands 34
- Side Stand 34
- Centre Stand 35
- Lifting Handle 35

Tool Kit and Handbook 36

Seat Fasteners 36
- Seat Care 37

Pannier System 37
- Pannier Operation. 39

Electrical Accessory Socket. 41

Running-In 42

Safe Operation 43
- Daily Safety Checks. 43

Instrument Panel Layout

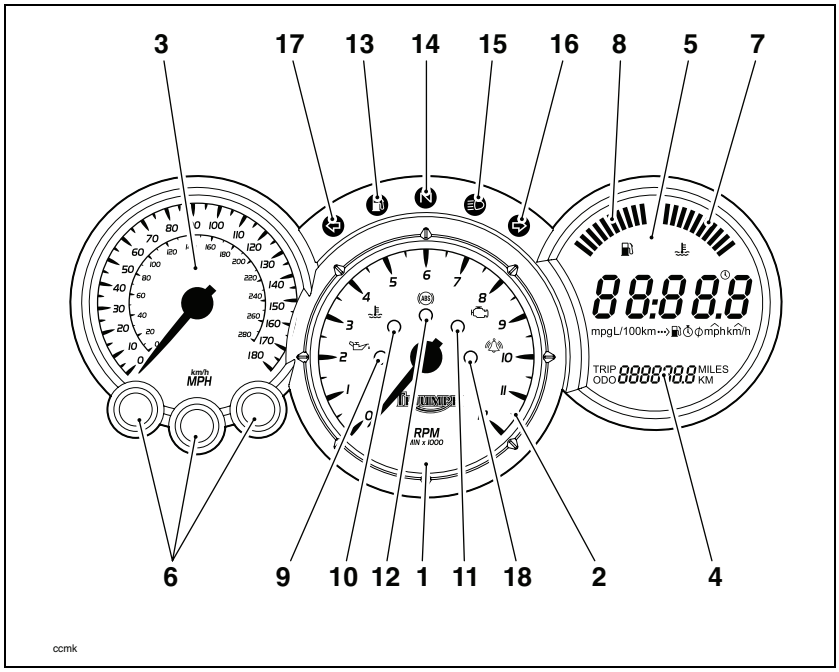

1. Tachometer
2. Tachometer 'red zone'
3. Speedometer
4. Odometer/Trip meters
5. Clock/Trip computer display
6. Scroll/Set/Trip buttons
7. Coolant temperature display
8. Fuel gauge
9. Low oil pressure warning light
10. High coolant temperature warning light
11. Engine management malfunction indicator light
12. ABS warning light (ABS models only)
13. Low fuel level indicator light
14. Neutral indicator light
15. High beam indicator light
16. Right turn indicator light
17. Left turn indicator light
18. Alarm status indicator light (alarm is an accessory fit)

Speedometer

The speedometer indicates the road speed of the motorcycle.

Tachometer

The tachometer shows the engine speed in revolutions per minute - rpm (r/min). On the right side of the tachometer face is the 'red zone'. Engine rpm (r/min) in the red zone is above maximum recommended engine speed and is also above the range for best performance.

Warning

Never allow engine rpm to enter the 'red zone' as severe engine damage may result.

Odometer/Trip Meter

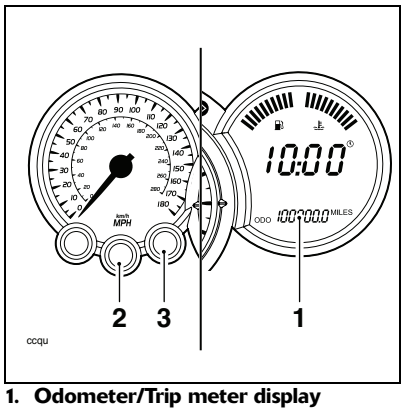

1. **Odometer/Trip meter display**
2. **Set button**
3. **Trip button**

The odometer shows the total distance that the motorcycle has travelled.

The odometer and two trip meters are located in the same LCD display as the clock and trip computer. Either trip meter shows the distance that the motorcycle has travelled since the meter on display was last reset to zero.

Warning

Do not attempt to switch between odometer and trip meter display modes or reset the trip meter with the motorcycle in motion as this may lead to loss of motorcycle control and an accident.

Use the 'trip' button to switch between the odometer and trip meter display modes. Press the 'trip' button repeatedly until the desired display is visible. The display will scroll through in the order:

- Odometer
- Trip Meter 1
- Trip Meter 2

To reset either of the trip meters, select and display the trip meter to be zeroed then press the 'trip' button for 2 seconds. After 2 seconds, the trip meter on display will reset to zero.

Clock/Trip Computer

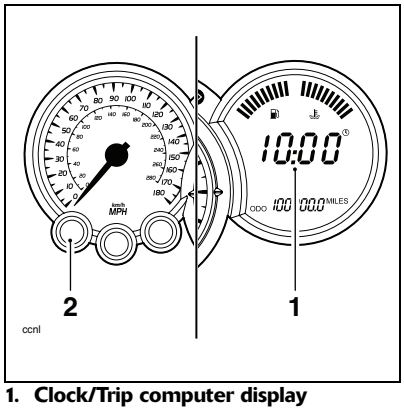

1. **Clock/Trip computer display**
2. **Scroll button**

The clock and trip computer information appear on the same display.

The trip computer provides an indication of fuel consumption, fuel range to empty, speed, time and distance, recorded and calculated since the last reset.

Each display provides the following information:

Instantaneous Fuel Consumption

An indication of the fuel consumption at an instant in time.

Average Fuel Consumption

An indication of the average fuel consumption is calculated from when the trip computer was last reset. After a reset the display will show dashes until 0.1 miles/km has been covered.

Range

This is an indication of the probable distance that can be travelled on the remaining fuel in the tank.

Journey Distance

The total distance travelled, since the last reset.

Journey Time

The total time elapsed, since the last reset.

Average Speed

The average speed is calculated from when the trip computer was last reset. After a reset the display will show dashes until 1 mile/km has been covered.

Maximum Speed

The maximum speed achieved since the last reset is displayed.

Trip Computer Operation

When the ignition is switched on, the clock display is shown. To access the trip computer information press the 'scroll' button.

Press the 'scroll' button repeatedly until the desired display is visible. The trip computer will scroll through in the order:

- Clock
- Instantaneous Fuel Consumption
- Average Fuel Consumption
- Range
- Journey Distance
- Journey Time
- Average Speed
- Maximum Speed

Trip Computer Reset

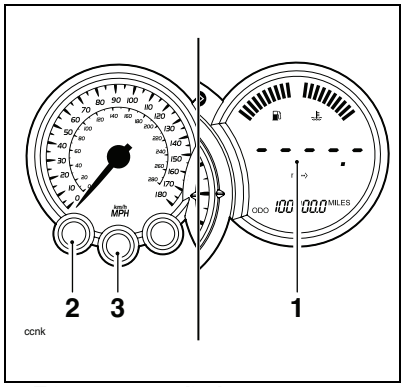

1. **Trip computer display**
2. **Scroll button**
3. **Set button**

The following displays on the trip computer can be reset:

- Average Fuel Consumption
- Journey Distance
- Journey Time
- Average Speed
- Maximum Speed

Warning

Do not attempt to switch between the trip computer display modes or reset the trip computer with the motorcycle in motion as this may lead to loss of motorcycle control and an accident.

To reset the trip computer select the desired display, press the 'scroll' and 'set' buttons simultaneously for 2 seconds. After 2 seconds, the selected display will reset.

Note:

- **Journey distance, journey time and average speed are reset at the same time.**

Clock Adjustment

Warning

Do not attempt to adjust the clock with the motorcycle in motion as this may lead to loss of motorcycle control and an accident.

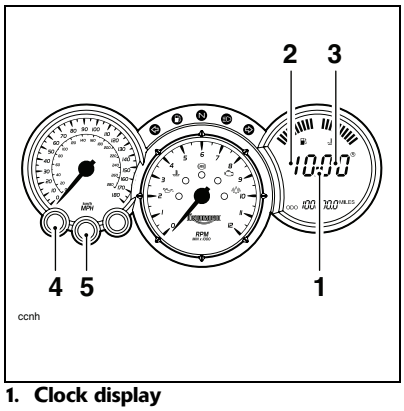

1. **Clock display**
2. **Hours read-out**
3. **Minutes read-out**
4. **Scroll button**
5. **Set button**

To reset the clock, select the clock display and press both 'scroll' and 'set' buttons together.

After a short time, the clock's hour display will start to flash.

To reset the hour display, ensure that the hour display is still flashing then depress the 'scroll' button to change the setting. Each individual press will change the setting by one digit. If the button is held, the display will continuously scroll through in single digit increments.

When the correct hour display is shown, press the 'set' button. The minutes display will begin to flash. The minutes display is adjusted in the same way as for the hours.

Once both hours and minutes are correctly set, press the 'set' button to confirm the setting. The display will cease to flash.

Coolant Temperature Gauge

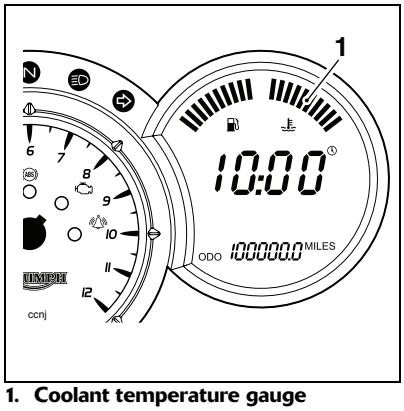

1. Coolant temperature gauge

The coolant temperature gauge indicates the temperature of the engine coolant.

When the ignition is switched on, all 10 bars of the display will be shown. When the engine is started from cold the display will show 1 bar. As the temperature increases, more bars will be shown in the display.

The normal temperature range is between 3 and 6 bars.

If the coolant temperature becomes too high, the display will show 9 bars and will start to flash. The high coolant temperature warning light in the tachometer will also be illuminated.

If the coolant temperature increases further, all 10 bars of the display will flash. The high coolant temperature warning light in the tachometer will remain illuminated.

Caution

Do not continue to run the engine if either of the high temperature warnings are displayed as severe engine damage may result.

Fuel Gauge

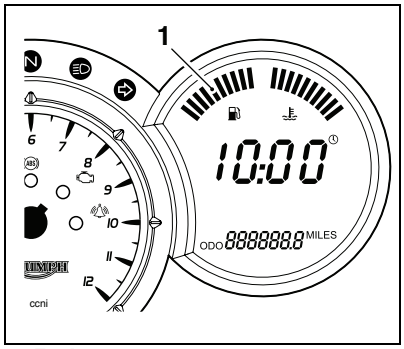

1. Fuel gauge

The fuel gauge indicates the amount of fuel in the tank.

With the ignition switched on, the number of bars shown in the display indicates the level of fuel in the tank.

When the fuel tank is full, all 10 bars are displayed and when empty, no bars are displayed. Other gauge markings indicate intermediate fuel levels between full and empty.

When 2 bars are displayed, the low fuel warning light will illuminate. This indicates there are approximately 4.0 litres of fuel remaining in the tank and you should refuel at the earliest opportunity.

After refuelling, the fuel gauge and range to empty information will be updated only while riding the motorcycle.

Depending on the riding style, this could take approximately 5 minutes.

Warning Lights

Direction Indicators

When the indicator is pushed to the left or right, the corresponding turn indicator light will flash on and off at the same speed as the turn indicators.

High Beam

When the ignition is switched on and the headlight dip switch is set to 'high beam', the high beam warning light will illuminate.

Low Fuel

The low fuel indicator will illuminate when there are approximately 4.0 litres of fuel remaining in the tank.

Neutral

N

The neutral warning light indicates when the transmission is in neutral (no gear selected). The warning light will illuminate when the transmission is in neutral with the ignition switch in the ON position.

Low Oil Pressure Warning Light

With the engine running, if the engine oil pressure becomes dangerously low, the low oil pressure warning light in the tachometer will illuminate.

Caution

Stop the engine immediately if the low oil pressure warning light illuminates. Do not restart the engine until the fault has been rectified.

Severe engine damage will result from running the engine when the low oil pressure warning light is illuminated.

The low oil pressure warning light in the tachometer will illuminate if the ignition is switched on without running the engine.

High Coolant Temperature Warning Light

With the engine running, if the engine coolant temperature becomes dangerously high, the high coolant temperature warning light in the tachometer will illuminate.

Caution

Stop the engine immediately if the high coolant temperature warning light illuminates. Do not restart the engine until the fault has been rectified.

Severe engine damage will result from running the engine when the high coolant temperature warning light is illuminated.

The high coolant temperature warning light in the tachometer will illuminate if the ignition is switched on without running the engine.

Engine Management System Malfunction Indicator Light

The malfunction indicator light for the engine management system illuminates when the ignition is switched on (to indicate that it is working) but should not become illuminated when the engine is running.

If the malfunction indicator light becomes illuminated when the engine is running, this indicates that a fault has occurred in one or more of the systems controlled by the engine management system. In such circumstances, the engine management system will switch to 'limp-home' mode so that the journey may be completed, if the fault is not so severe that the engine will not run.

Warning

Reduce speed and do not continue to ride for longer than is necessary with the malfunction indicator light illuminated. The fault may adversely affect engine performance, exhaust emissions and fuel consumption. Reduced engine performance could cause a dangerous riding condition, leading to loss of control and an accident. Contact an authorised Triumph dealer as soon as possible to have the fault checked and rectified.

ABS (Anti-Lock Brake System) Indicator Light

(only on models fitted with ABS)

The ABS indicator light illuminates to show that the ABS function is not available. Illumination is normal after engine start-up, and until the motorcycle first reaches a speed exceeding 6 mph (10 km/h). Unless there is a fault, it should not illuminate again until the engine is restarted.

If the indicator light becomes illuminated at any other time while riding it indicates that the ABS has a malfunction that requires investigation.

Warning

If the ABS is not functioning, the brake system will continue to function as a non-ABS braking system. Do not continue to ride for longer than is necessary with the indicator light illuminated. Contact an authorised Triumph dealer as soon as possible to have the fault checked and rectified. In this situation, braking too hard will cause the wheels to lock resulting in loss of control and an accident.

See also Braking on page *49*.

Alarm Indicator Light

The alarm light will illuminate when the conditions described in the accessory alarm instructions are met.

The light does not function unless an alarm is fitted.

Ignition Key

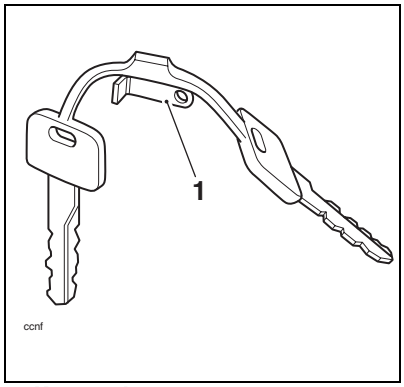

1. Key number tag

In addition to operating the steering lock/ignition switch, the ignition key is required to operate the seat lock and fuel tank cap.

When the motorcycle is delivered from the factory, two keys are supplied together with a small tag bearing the key number. Make a note of the key number and store the spare key and key number tag in a safe place away from the motorcycle.

Your authorised Triumph dealer can supply a replacement key cut from details of the key number or can cut a new key using the original as a master.

Note:

- **One unused lock is supplied with the motorcycle. This is for use with the optional accessory top box and will ensure that, when fitted, the same key will operate all the locks on the motorcycle.**

Caution

Do not store the spare key with the motorcycle as this will reduce all aspects of security.

Ignition Switch/Steering Lock

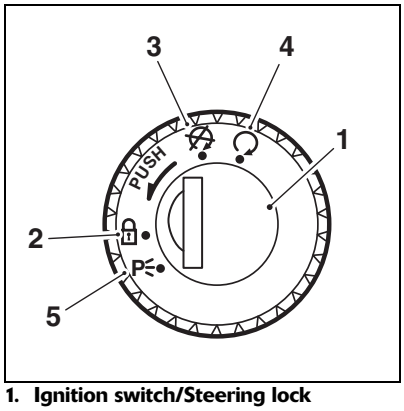

1. **Ignition switch/Steering lock**
2. **LOCK position**
3. **OFF position**
4. **ON position**
5. **PARK position**

Ignition Switch Positions

This is a four position, key operated switch. The key can be removed from the switch only when it is in the OFF, LOCK or P (PARK) position.

TO LOCK: Turn the key to the OFF position, push and fully release the key, then rotate it to the LOCK position.

PARKING: Turn the key from the LOCK position to the P position. The steering will remain locked.

Note:

- **Do not leave the steering lock in the P position for long periods of time as this will cause the battery to discharge.**

Warning

For reasons of security and safety, always move the ignition switch to the OFF position and remove the key when leaving the motorcycle unattended.

Any unauthorised use of the motorcycle may cause injury to the rider, other road users and pedestrians and may also cause damage to the motorcycle.

Warning

With the key in the LOCK or P position the steering will become locked.

Never turn the key to the LOCK or P positions while the motorcycle is moving as this will cause the steering to lock. Locked steering will cause loss of motorcycle control and an accident.

Brake and Clutch Lever Adjusters

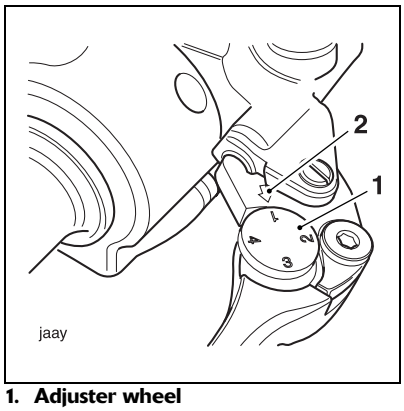

1. **Adjuster wheel**
2. **Triangular mark**

An adjuster is fitted to both the front brake and clutch levers. The adjusters allow the distance from the handlebar to the levers to be changed to one of four positions, to suit the span of the operator's hands.

To adjust the levers, push each lever forward and turn the adjuster wheel to align one of the numbered positions with the triangular mark on the lever holder.

The distance from the handlebar grip to the released lever is shortest when set to number four and longest when set to number one.

Warning

Do not attempt to adjust the levers with the motorcycle in motion as this may lead to loss of motorcycle control and an accident.

After adjusting the levers, operate the motorcycle in an area free from traffic to gain familiarity with the new lever setting. Do not loan your motorcycle to anyone as they may change the lever setting from the one you are familiar with causing loss of control or an accident.

Right Handlebar Switches

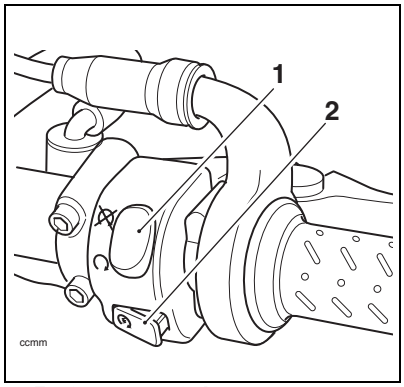

1. **Engine stop switch**
2. **Starter button**

Engine Stop Switch

In addition to the ignition switch being turned to the ON position, the engine stop switch must be in the RUN position for the motorcycle to operate.

The engine stop switch is for emergency use. If an emergency arises which requires the engine to be stopped, move the engine stop switch to the STOP position.

Note:

- **Although the engine stop switch stops the engine, it does not turn off all the electrical circuits and may cause difficulty in restarting the engine due to a discharged battery. Ordinarily, only the ignition switch should be used to stop the engine.**

Caution

Do not leave the ignition switch in the ON position unless the engine is running as this may cause damage to electrical components and will discharge the battery.

Starter Button

The starter button operates the electric starter. For the starter to operate, the clutch lever must be pulled to the handlebar.

Note:

- **Even if the clutch lever is pulled to the handlebar, the starter will not operate if the side stand is down and a gear is engaged.**

Left Handlebar Switches

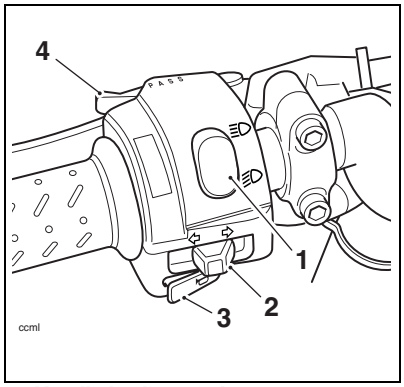

1. **Headlight dip switch**
2. **Direction indicator switch**
3. **Horn button**
4. **Pass button**

Headlight Dip Switch

High or low beam can be selected with the headlight dip switch. To select high beam, push the switch forward. To select low beam, push the switch rearwards. When the high beam is turned on, the high beam indicator light will illuminate.

Note:

- **A lighting on/off switch is not fitted to this model. The headlight, rear light and licence plate light all function automatically when the ignition is turned to the ON position.**

Direction Indicator Switch

When the indicator switch is pushed to the left or right and released, the corresponding direction indicators will flash on and off. To turn off the indicators, push and release the switch.

Horn Button

When the horn button is pushed, with the ignition switch turned to the ON position, the horn will sound.

Pass Button

When the pass button is pressed, the headlight main beam will be switched on. It will remain on as long as the button is held in and will turn off as soon as the button is released.

Fuel Requirement/Refuelling

Fuel Grade

Your Triumph engine is designed to use unleaded fuel and will give optimum performance if the correct grade of fuel is used. Always use unleaded fuel with an octane rating of 95 RON.

Caution

In all countries except Australia, Hong Kong, New Zealand and South Africa, the exhaust system for this model is fitted with a catalytic converter to help reduce exhaust emission levels. The catalytic converter can be permanently damaged if the motorcycle is allowed to run out of fuel or if the fuel level is allowed to get very low. Always ensure you have adequate fuel for your journey.

Caution

The use of leaded fuel is illegal in most countries, states or territories. Use of leaded fuel will damage the catalytic converter (if fitted).

Warning

To help reduce hazards associated with refuelling, always observe the following fuel safety instructions:

Petrol (fuel) is highly flammable and can be explosive under certain conditions. When refuelling, turn the ignition switch to the OFF position.

Do not smoke.

Do not use a mobile telephone.

Make sure the refuelling area is well ventilated and free from any source of flame or sparks. This includes any appliance with a pilot light.

Never fill the tank until the fuel level rises into the filler neck. Heat from sunlight or other sources may cause the fuel to expand and overflow creating a fire hazard.

After refuelling always check that the fuel filler cap is correctly closed and locked.

Because petrol (fuel) is highly flammable, any fuel leak or spillage, or any failure to observe the safety advice given above will lead to a fire hazard, which could cause damage to property, injury to persons or death.

Fuel Tank Cap

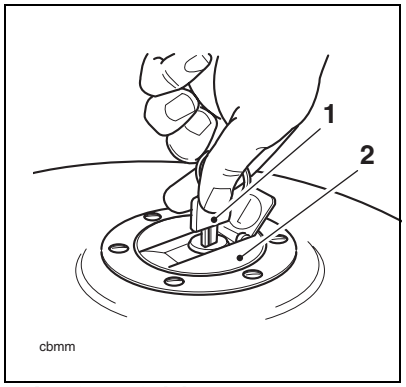

1. **Ignition switch key**
2. **Fuel tank cap**

To open the fuel tank cap, lift up the flap covering the lock itself. Insert the key into the lock and turn the key clockwise.

To close and lock the cap, push the cap down into place with the key inserted, until the lock 'clicks' into place. Withdraw the key and close the key cover.

Caution

Closing the cap without the key inserted will damage the cap, tank and lock mechanism.

Filling the Fuel Tank

Avoid filling the tank in rainy or dusty conditions where airborne material can contaminate the fuel.

Caution

Contaminated fuel may cause damage to fuel system components.

Fill the fuel tank slowly to help prevent spillage. Do not fill the tank to a level above the bottom of the filler neck. This will ensure there is enough air space to allow for fuel expansion if the fuel inside the tank expands through absorption of heat from the engine or from direct sunlight.

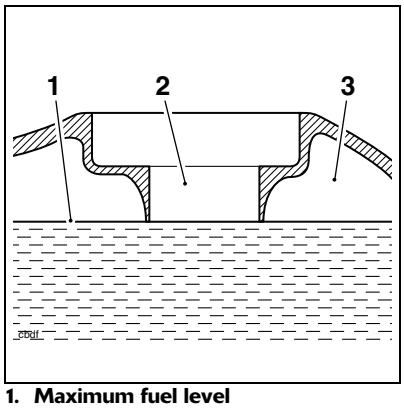

1. **Maximum fuel level**
2. **Fuel filler neck**
3. **Air space**

After refuelling always check that the fuel filler cap is correctly closed and locked.

Warning

Overfilling the tank can lead to fuel spillage.

If fuel is spilled, thoroughly clean up the spillage immediately and dispose of the materials used safely.

Take care not to spill any fuel on the engine, exhaust pipes, tyres or any other part of the motorcycle.

Because fuel is highly flammable, any fuel leak or spillage, or any failure to observe the safety advice given above may lead to a fire hazard, which could cause damage to property and injury or death to persons.

Fuel spilled near to, or onto the tyres will reduce the tyre's ability to grip the road. This will result in a dangerous riding condition potentially causing loss of motorcycle control and an accident.

Stands

Side Stand

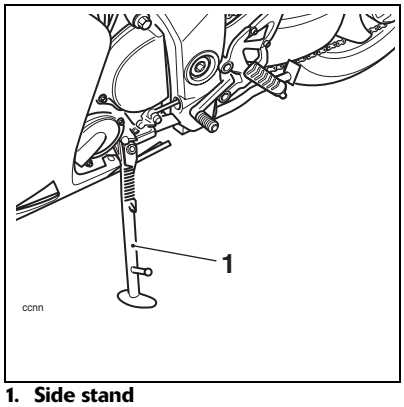

1. Side stand

The motorcycle is equipped with a side stand on which the motorcycle can be parked.

Warning

The motorcycle is fitted with an interlock system to prevent it from being ridden with the side stand in the down position.

Never attempt to ride with the side stand down or interfere with the interlock mechanism as this will cause a dangerous riding condition leading to loss of motorcycle control and an accident.

Note:

- **When using the side stand, always turn the handlebars fully to the left and leave the motorcycle in first gear.**

Whenever the side stand is used before riding, always ensure that the stand is fully up after first sitting on the motorcycle.

For instructions on safe parking, refer to the 'How to Ride the Motorcycle' section.

Centre Stand

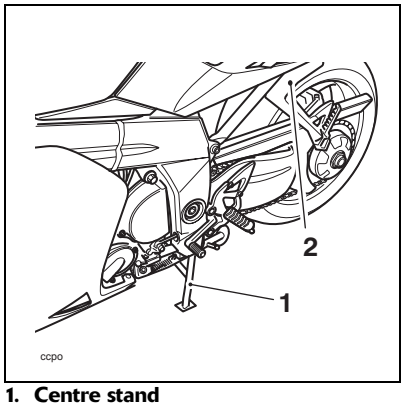

1. **Centre stand**
2. **Lifting handle**

To set the motorcycle up on the centre stand, step down firmly on the foot-finder part of the stand, then lift the motorcycle up and to the rear using the lifting handle as a handhold.

For instructions on safe parking, refer to the 'How to Ride the Motorcycle' section.

Lifting Handle

The lifting handle is located on the left hand side of the motorcycle, and is the upper edge of the pillion footrest hanger.

Always use the lifting handle to park the motorcycle on the centre stand.

Warning

Do not use the side panel or seat as a hand-hold when placing the motorcycle on the centre stand as this will cause damage.

Tool Kit and Handbook

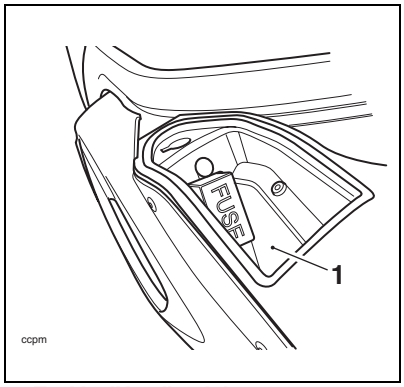

1. Tool kit/Handbook location

The tool kit and handbook are located in a lockable stowage box on the right hand side of the motorcycle.

To gain access, insert the ignition key into the lock and remove the cover.

Note:

- **The stowage box is not waterproof.**

Seat Fasteners

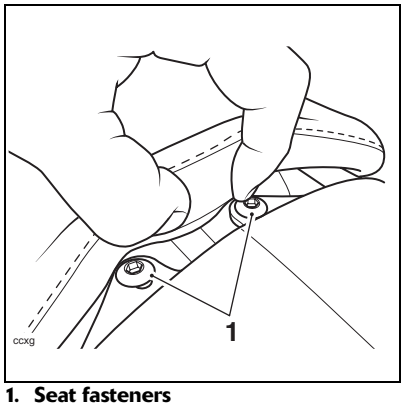

1. Seat fasteners

The seat fasteners are located under the rear edge of the seat. To remove the seat, push back the rear edge of the seat and unscrew the exposed fasteners. This will release the seat and allow it to slide rearwards for complete removal from the motorcycle.

Warning

The silencer heat shield is located directly below the seat and may be hot to the touch. Do not touch the heat shield as contact with the hot heat shield may cause the skin to become burned.

Seat Care

To prevent damage to the seat or seat cover, care must be taken not to drop or lean the seat against any surface which may damage the seat or seat cover.

Caution

To prevent damage to the seat or seat cover, care must be taken not to drop the seat. Do not lean the seat against the motorcycle or any surface which may damage the seat or seat cover. Instead, place the seat, with the seat cover facing upwards, on a clean, flat surface which is covered with a soft cloth.

Do not place any item on the seat which may cause damage or staining to the seat cover.

To refit the seat, engage the seat's tongue under the fuel tank and press down at the rear to engage. Tighten the seat fasteners to **3 Nm**.

Pannier System

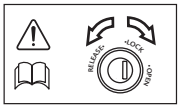

To install each pannier:

Note:

- **The pannier is marked in three positions around the lock barrel. To lock, release or open the panniers, the key slot must align with the corresponding markings around the barrel as shown.**

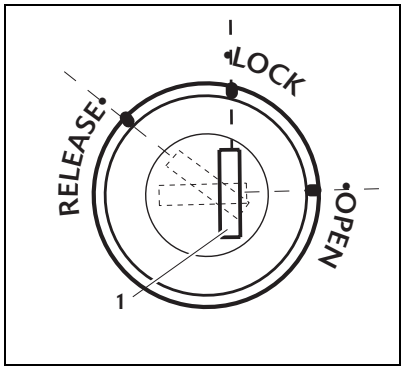

1. **Key slot (shown in the LOCK position)**

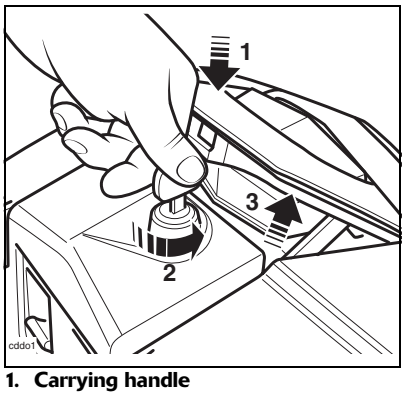

1. Carrying handle

Insert the key into the lock. Lightly press down on the carrying handle and turn the key anti-clockwise then release the carrying handle. Lift the carrying handle to its fully raised position.

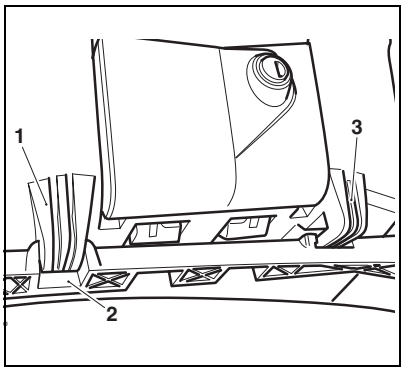

1. Front fixed hook (pannier)
2. Front locating point (pannier rail)
3. Rear fixed hook

Position the pannier against the pannier rail and engage the front fixed hook of the pannier with the front locating point on the rail. The rear fixed hook should be above the pannier rail at this point.

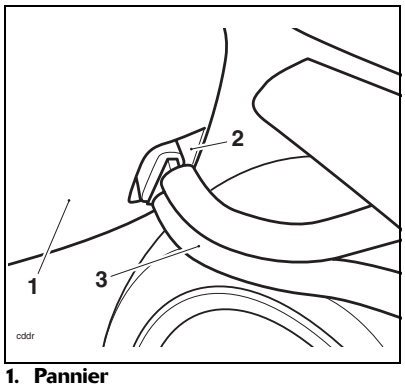

1. Pannier
2. Locating cup
3. Locating bracket

Lower the rear fixed hook to the pannier rail ensuring that the end of the locating bracket fits into the locating cup moulded into the side of the pannier.

Lock the pannier to the rail by turning and holding the key anti-clockwise and at the same time pressing the carrying handle to the fully closed position. Turn the key to the central LOCK position and remove it.

To remove each pannier:

Note:

- **The same procedure can be followed to remove and mount the left hand or the right hand panniers.**

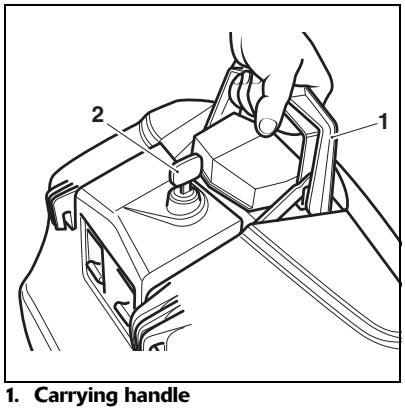

1. **Carrying handle**
2. **Key**

To unlock and remove the pannier from the pannier rail, insert the key into the lock. Lightly press down on the carrying handle and turn the key anti-clockwise then release the carrying handle. Lift the carrying handle to its fully raised position and lift the pannier free from the pannier rail.

Pannier Operation

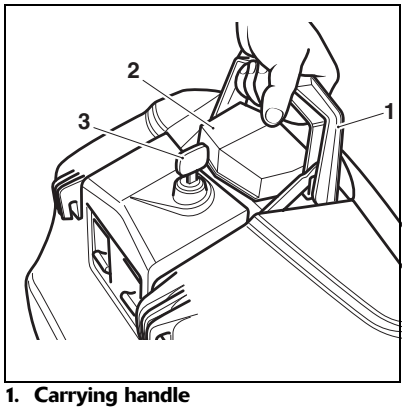

1. **Carrying handle**
2. **Press plate**
3. **Key**

To unlock the lid of the pannier, insert the key and turn it to the OPEN position, then press down on the press plate. The lid can then be opened.

To lock the lid of the pannier, turn the key to the OPEN position, press down on the press plate and close the lid then release the press plate. Turn the key to the central LOCK position and remove it.

If the key cannot be removed, repeat the lid locking procedure making sure the lid is properly closed and the press plate has returned to the fully locked position.

Warning

The maximum safe load for each pannier is 5 kg (11 lbs). Never exceed this loading limit as this may cause the motorcycle to become unstable leading to loss of control and an accident.

Warning

Incorrect loading may result in an unsafe riding condition leading to an accident.

Always ensure any loads carried are evenly distributed on both sides of the motorcycle. Ensure that the load is correctly secured such that it will not move around while the motorcycle is in motion.

Always check the load security regularly (though not while the motorcycle is in motion) and ensure that the load does not extend beyond the rear of the motorcycle. Never exceed the maximum vehicle loading weight of 215 kg.

This maximum loading weight is made up from the combined weight of the rider, passenger, any accessories fitted and any load carried.

Warning

After fitting or removing the panniers, operate the motorcycle in a safe area free from traffic to gain familiarity with the new handling characteristics. Operation when not familiar with the new characteristics of the motorcycle may result in loss of control and an accident.

Warning

Never ride an accessory equipped motorcycle (especially those fitted with a pannier system) at speeds above the legal speed limit or at a speed inappropriate for the circumstances.

Speeds in excess of 130 km/h (80 mph) should not be attempted on an accessory equipped motorcycle even where the legal speed limit permits this. The presence of accessories will cause changes in the stability and handling of the motorcycle.

Failure to allow for changes in motorcycle stability may lead to loss of control or an accident.

Remember that the 130 km/h (80 mph) absolute limit will be reduced by the fitting of non-approved accessories, incorrect loading, worn tyres, overall motorcycle condition and poor road or weather conditions.

Warning

This motorcycle must not be operated above the legal road speed limit except in authorised closed-course conditions.

Warning

Only operate this Triumph motorcycle at high speed in closed-course on-road competition or on closed-course racetracks. High-speed operation should only be attempted by riders who have been instructed in the techniques necessary for high-speed riding and are familiar with the motorcycle's characteristics in all conditions.

High-speed operation in any other circumstances is dangerous and will lead to loss of motorcycle control and an accident.

Electrical Accessory Socket

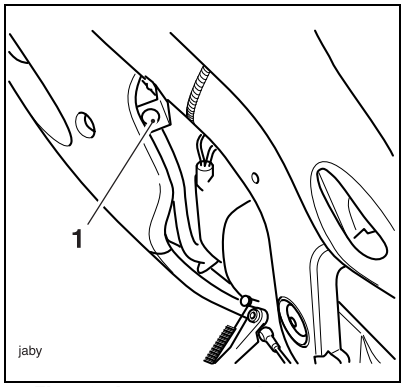

1. Electrical accessory socket

An electrical accessory socket is provided on the left hand side of the motorcycle.

The socket will provide a 12 Volt electrical supply. The socket is protected by a 10 amp fuse therefore items with a current draw greater than 10 amps must not be plugged into the socket.

A plug, suitable for use with the accessory socket, is available from your authorised Triumph dealer.

Running-In

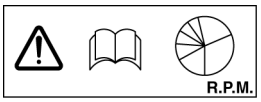

Running-in is the name given to the process that occurs during the first hours of a new vehicle's operation.

In particular, internal friction in the engine will be higher when components are new. Later on, when continued operation of the engine has ensured that the components have 'bedded in', this internal friction will be greatly reduced.

A period of careful running-in will ensure lower exhaust emissions, and will optimise performance, fuel economy and longevity of the engine and other motorcycle components.

During the first 500 miles (800 kilometres):

- Do not use full throttle.
- Avoid high engine speeds at all times.
- Avoid riding at one constant engine speed, whether fast or slow, for a long period of time.
- Avoid aggressive starts, stops, and rapid accelerations, except in an emergency.
- Do not ride at speeds greater than 3/4 of maximum speed.

From 500 to 1000 miles (800 to 1500 kilometres):

- Engine speed can gradually be increased to the rev limit for short periods.

Both during and after running-in has been completed:

- Do not over-rev the engine when cold.
- Do not let the engine labour. Always downshift before the engine begins to 'struggle'.
- Do not ride with engine speeds unnecessarily high. Changing up a gear helps reduce fuel consumption, reduces noise and helps to protect the environment.

Safe Operation

Daily Safety Checks

cbob

Check the following items each day before you ride. The time required is minimal, and these checks will help ensure a safe, reliable ride.

If any irregularities are found during these checks, refer to the Maintenance and Adjustment section or see your authorised Triumph dealer for the action required to return the motorcycle to a safe operating condition.

Warning

Failure to perform these checks every day before you ride may result in serious motorcycle damage or an accident causing serious injury or death.

Check:

Fuel: Adequate supply in tank, no fuel leaks (page *32*).

Engine Oil: Correct level on dipstick. Add correct specification oil as required. No leaks from the engine or oil cooler (page *67*).

Drive Chain: Check drive chain for correct adjustment and lubrication (page *76*).

Tyres/Wheels: Correct inflation pressures (when cold). Tread depth/wear, tyre/wheel damage, punctures etc. (page *89*).

Nuts, Bolts, Fasteners: Visually check that steering and suspension components, axles, and all controls are properly tightened or fastened. Inspect all areas for loose/damaged fixings.

Steering Action: Smooth but not loose from lock to lock. No binding of any of the control cables (page *85*).

Brakes: Pull the brake lever and push the brake pedal to check for correct resistance. Investigate any lever/pedal where the travel is excessive before meeting resistance, or if either control feels spongy in operation (page *80*).

On models fitted with ABS: Ensure that the ABS warning light does not remain illuminated at speeds above 6 mph (10 km/h) when moving off (page *49*).

Brake Pads: There should be more than 1.5 mm of friction material remaining on all the pads (page *80*).

Brake Fluid Levels: No brake fluid leakage. Brake fluid levels must be between the MAX and MIN marks on both reservoirs (page *82*).

Front Forks: Smooth action. No leaks from fork seals (page *86*).

Throttle: Throttle grip free play 2-3 mm. Ensure that the throttle grip returns to the idle position without sticking (page *73*).

Clutch: Smooth operation and correct cable free play (page *75*).

Coolant: No coolant leakage. Check the coolant level in the expansion tank (when the engine is cold) (page *70*).

Electrical Equipment: All lights and horn function correctly (page *31*).

Engine Stop: Stop switch turns the engine off (page *46*).

Stands: Return to the fully up position by spring tension. Return springs not weak or damaged (page *34*).

This page intentionally left blank

HOW TO RIDE THE MOTORCYCLE

Table of Contents

To Stop the Engine 46
To Start the Engine 46
Moving Off 47
Changing Gears 48
Braking 49
ABS (Anti-Lock Brake System) models only 51
Parking 52
Considerations for High-Speed Operation 54
General 54
Steering 54
Luggage 54
Brakes 55
Tyres 55
Fuel 55
Engine Oil 55
Coolant 55
Electrical Equipment 55
Miscellaneous 55

To Stop the Engine

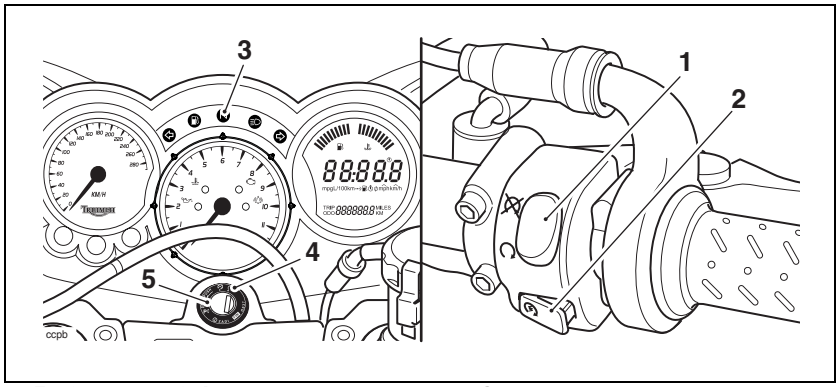

1. **Engine stop switch**
2. **Starter button**
3. **Neutral indicator light**
4. **ON position**
5. **Ignition switch**

Close the throttle completely.

Select neutral.

Turn the ignition switch off.

Select first gear.

Support the motorcycle on a firm, level surface with the side or centre stand.

Lock the steering.

Caution

The engine should normally be stopped by turning the ignition switch to the OFF position. The engine stop switch is for emergency use only. Do not leave the ignition switched on with the engine stopped. Electrical damage may result.

To Start the Engine

Check that the engine stop switch is in the RUN position.

Ensure the transmission is in neutral.

Turn the ignition switch on.

Note:

- **When the ignition is switched on, the tachometer and speedometer needles will quickly sweep from zero to maximum and then return to zero. The instrument warning lights will illuminate and will then go off (except those which normally remain on until the engine starts - see page *25*). It is not necessary to wait for the needle to return to zero before starting the engine.**
- **In very cold conditions, part open the throttle to aid cold starting. Return to the closed position once the engine has started.**

Pull the clutch lever fully into the handlebar.

Leaving the throttle fully closed, push the starter button until the engine starts.

Warning

Never start the engine or run the engine in a confined area. Exhaust fumes are poisonous and can cause loss of consciousness and death within a short period of time. Always operate your motorcycle in the open-air or in an area with adequate ventilation.

Caution

Do not operate the starter continuously for more than 5 seconds as the starter motor will overheat and the battery will become discharged. Wait 15 seconds between each operation of the starter to allow for cooling and recovery of battery power.

Do not let the engine idle for long periods as this may lead to overheating which will cause damage to the engine.

Caution

The low oil pressure warning light should go out shortly after the engine starts.

If the low oil pressure warning light stays on after starting the engine, stop the engine immediately and investigate the cause. Running the engine with low oil pressure will cause severe engine damage.

- The motorcycle is equipped with starter lockout switches. The switches prevent the electric starter from operating when the transmission is not in neutral with the side stand down.
- If the side stand is extended whilst the engine is running, and the transmission is not in neutral then the engine will stop regardless of clutch position.

Moving Off

Pull in the clutch lever and select first gear. Open the throttle a little and let out the clutch lever slowly. As the clutch starts to engage, open the throttle a little more, allowing enough engine speed to avoid stalling.

Changing Gears

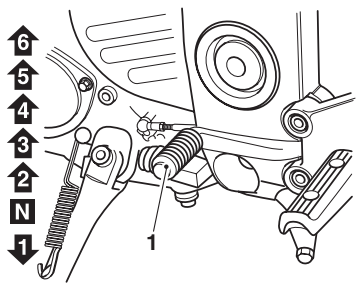

1. Gear change pedal

Close the throttle while pulling in the clutch lever. Change into the next higher or lower gear. Open the throttle part way, while releasing the clutch lever. Always use the clutch when changing gear.

Warning

Take care to avoid opening the throttle too far or too fast in any of the lower gears as this can lead to the front wheel lifting from the ground (pulling a 'wheelie') and to the rear tyre breaking traction (wheel spin).

Always open the throttle cautiously, particularly if you are unfamiliar with the motorcycle, as a 'wheelie' or loss of traction will cause loss of motorcycle control and an accident.

Note:

- **The gear change mechanism is the 'positive stop' type. This means that, for each movement of the gear change pedal, you can only select each gear, one after the other, in ascending or descending order.**

Warning

Do not change to a lower gear at speeds that will cause excessive engine rpm (r/min). This can lock the rear wheel causing loss of control and an accident. Engine damage may also be caused. Changing down should be done such that low engine speeds will be ensured.

Braking

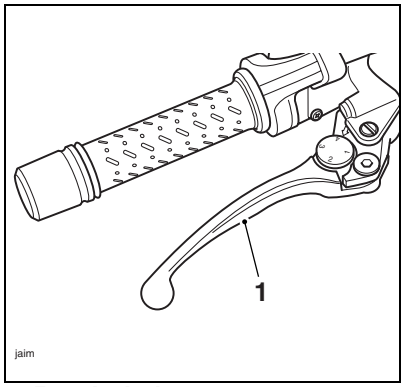

1. **Front brake lever**

Warning

WHEN BRAKING, OBSERVE THE FOLLOWING:

Close the throttle completely, leaving the clutch engaged to allow the engine to help slow down the motorcycle.

Change down one gear at a time such that the transmission is in first gear when the motorcycle comes to a complete stop.

When stopping, always apply both brakes at the same time. Normally the front brake should be applied a little more than the rear.

Change down or fully disengage the clutch as necessary to keep the engine from stalling.

Never lock the brakes, as this may cause loss of control of the motorcycle and an accident.

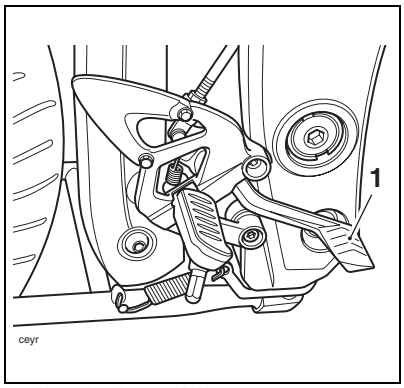

1. **Rear brake pedal**

Warning

For emergency braking, disregard down changing, and concentrate on applying the front and rear brakes as hard as possible without skidding. Riders should practice emergency braking in a traffic-free area. (See ABS warnings below/over.)

Triumph strongly recommends that all riders take a course of instruction, which includes advice on safe brake operation. Incorrect brake technique could result in loss of control and an accident.

Warning

For your safety, always exercise extreme caution when braking, (whether or not ABS is fitted), accelerating or turning as any incautious action can cause loss of control and an accident. Independent use of the front or rear brakes reduces overall braking performance. Extreme braking may cause either wheel to lock, reducing control of the motorcycle and causing an accident (see ABS warnings below).

When possible, reduce speed or brake before entering a turn as closing the throttle or braking in mid-turn may cause wheel slip leading to loss of control and an accident.

When riding in wet or rainy conditions, or on loose surfaces, the ability to manoeuvre and stop will be reduced. All of your actions should be smooth under these conditions. Sudden acceleration, braking or turning may cause loss of control and an accident.

Warning

When descending a long, steep gradient, use engine braking by down changing and use the brakes intermittently. Continuous brake application can overheat the brakes and reduce their effectiveness.

Riding with your foot on the brake pedal or your hands on the brake lever may actuate the brake light, giving a false indication to other road users. It may also overheat the brake, reducing braking effectiveness.

Do not coast with the engine switched off, and do not tow the motorcycle. The transmission is pressure-lubricated only when the engine is running. Inadequate lubrication may cause damage or seizure of the transmission, which can lead to sudden loss of motorcycle control and an accident.

ABS (Anti-Lock Brake System) models only

Warning

Where fitted, ABS prevents the wheels from locking, therefore maximising the effectiveness of the braking system in emergencies and when riding on slippery surfaces. The potentially shorter braking distances ABS allows under certain conditions are not a substitute for good riding practice.

Always ride within the legal speed limit.

Never ride without due care and attention and always reduce speed in consideration of weather, road and traffic conditions.

Take care when cornering. If the brakes are applied in a corner, ABS will not be able to counteract the weight and momentum of the motorcycle. This can result in loss of control and an accident.

Under some circumstances it is possible that a motorcycle equipped with ABS may require a longer stopping distance than an equivalent motorcycle without ABS.

ABS Warning Light

The ABS indicator light illuminates to show that the ABS function is not available. Illumination is normal after engine start-up, and until the motorcycle first reaches a speed exceeding 6 mph (10 km/h). Unless there is a fault, it should not illuminate again until the engine is restarted.

If the indicator light becomes illuminated at any other time while riding, it indicates that the ABS has a malfunction that requires investigation.

Note:

- **Normally, the rider will perceive ABS operation as a harder feel or a pulsation of the brake lever and pedal. As the ABS is not an integrated braking system and it does not control both the front and rear brake at the same time, this pulsation may be felt in the lever, the pedal or both.**
- **The ABS may be activated by sudden upward or downward changes in the road surface.**

Warning

If the ABS is not functioning, the brake system will continue to function as a non-ABS braking system. Do not continue to ride for longer than is necessary with the indicator light illuminated. Contact an authorised Triumph dealer as soon as possible to have the fault checked and rectified. In this situation, braking too hard will cause the wheels to lock resulting in loss of control and an accident.

Warning

The ABS warning light will illuminate when the rear wheel is driven at high speed for more than 30 seconds when the motorcycle is on a stand. This reaction is normal.

When the ignition is switched off and the motorcycle is re-started, the warning light will illuminate until the motorcycle reaches a speed exceeding 19 mph (30 km/h).

Warning

The ABS computer operates by comparing the relative speed of the front and rear wheels. Use of non-recommended tyres can affect wheel speed and cause the ABS function not to operate, potentially leading to loss of control and an accident in conditions where the ABS would normally function.

Parking

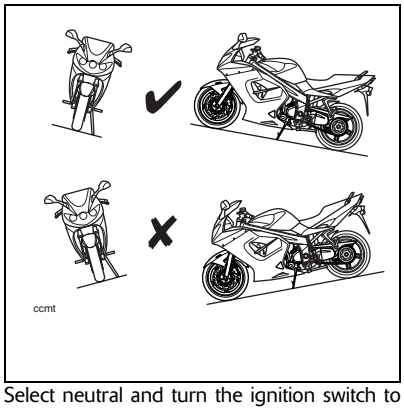

Select neutral and turn the ignition switch to the OFF position.

Lock the steering to help prevent theft.

Always park on a firm, level surface to prevent the motorcycle from falling.

When parking on a hill, always park facing uphill to prevent the motorcycle from rolling off the stand. Engage first gear to prevent the motorcycle from moving.

On a lateral (sideways) incline, always park such that the incline naturally pushes the motorcycle towards the side stand.

Do not park on a lateral (sideways) incline of greater than 6° and never park facing downhill.

Note:

- **When parking near traffic at night, or when parking in a location where parking lights are required by law, leave the tail, licence plate and position lights on by turning the ignition switch to P (Park).**

Do not leave the switch in the P position for long periods of time as this will discharge the battery.

Ensure that the side stand is fully retracted before riding off.

Warning

Do not park on a soft or on a steeply inclined surface. Parking under these conditions may cause the motorcycle to fall over causing damage to property and personal injury.

Warning

Petrol is extremely flammable and can be explosive under certain conditions. If parking inside a garage or other structure, be sure it is well ventilated and the motorcycle is not close to any source of flame or sparks. This includes any appliance with a pilot light.

Failure to follow the above advice may cause a fire resulting in damage to property or personal injury.

Warning

The engine and exhaust system will be hot after riding. DO NOT park where pedestrians and children are likely to touch the motorcycle.

Touching any part of the engine or exhaust system when hot may cause unprotected skin to become burnt.

Considerations for High-Speed Operation

Warning

This Triumph motorcycle should be operated within the legal speed limits for the particular road travelled. Operating a motorcycle at high speeds can be potentially dangerous since the time available to react to given traffic situations is greatly reduced as road speed increases. Always reduce speed in consideration of weather and traffic conditions.

Warning

Only operate this Triumph motorcycle at high speed in closed-course on-road competition or on closed-course racetracks. High-speed operation should only then be attempted by riders who have been instructed in the techniques necessary for high-speed riding and are familiar with the motorcycle's characteristics in all conditions.

High-speed operation in any other circumstances is dangerous and will lead to loss of motorcycle control and an accident.

Warning

The handling characteristics of a motorcycle at high speed may vary from those you are familiar with at legal road speeds. Do not attempt high-speed operation unless you have received sufficient training and have the required skills as a serious accident may result from incorrect operation.

Warning

The items listed are extremely important and must never be neglected. A problem, which may not be noticed at normal operating speeds, may be greatly exaggerated at high speeds.

General

Ensure the motorcycle has been maintained according to the scheduled maintenance chart.

Steering

Check that the handlebar turns smoothly without excessive free play or tight spots. Ensure that the control cables do not restrict the steering in any way.

Luggage

Make certain that any luggage containers are closed, locked and securely fitted to the motorcycle.

Brakes

Check that the front and rear brakes are functioning properly.

On models fitted with ABS, check that the system is functioning by ensuring that the ABS indicator light does not remain illuminated at speeds above 6 mph (10 km/h).

Tyres

High-speed operation is hard on tyres, and tyres that are in good condition are crucial to riding safely. Examine their overall condition, inflate to the correct pressure (when the tyres are cold), and check the wheel balance. Securely fit the valve caps after checking tyre pressures. Observe the information given in the Maintenance and Specification sections on tyre checking and tyre safety.

Fuel

Have sufficient fuel for the increased fuel consumption that will result from high-speed operation.

Caution

In all countries except Australia, Hong Kong, New Zealand and South Africa, the exhaust system for this model is fitted with a catalytic converter to help reduce exhaust emission levels. The catalytic converter can be permanently damaged if the motorcycle is allowed to run out of fuel or if the fuel level is allowed to get very low. Always ensure you have adequate fuel for your journey.

Engine Oil

Make certain that the engine oil level is correct. Ensure that the correct grade and type of oil is used when topping up.

Coolant

Check that the coolant level is at the upper level line in the expansion tank. (Always check the level with the engine cold.)

Electrical Equipment

Make certain that the headlight, rear/brake light, direction indicators, horn, etc. all work properly.

Miscellaneous

Visually check that all fixings are tight.

This page intentionally left blank

ACCESSORIES AND LOADING

The addition of accessories and carriage of additional weight can affect the motorcycle's handling characteristics causing changes in stability and necessitating a reduction in speed. The following information has been prepared as a guide to the potential hazards of adding accessories to a motorcycle and carrying passengers and additional loads.

Warning

Incorrect loading may result in an unsafe riding condition leading to an accident.

Always ensure any loads carried are evenly distributed on both sides of the motorcycle. Ensure that the load is correctly secured such that it will not move around while the motorcycle is in motion.

Always check the load security regularly (though not while the motorcycle is in motion) and ensure that the load does not extend beyond the rear of the motorcycle.

Never exceed the maximum vehicle loading weight of 215 kg.

This maximum loading weight is made up from the combined weight of the rider, passenger, any accessories fitted and any load carried.

Warning

Do not install accessories or carry luggage that impairs the control of the motorcycle. Make sure that you have not adversely affected the visibility of any lighting component, road clearance, banking capability (i.e. lean angle), control operation, wheel travel, ABS where fitted, front fork movement, visibility in any direction, or any other aspect of the motorcycle's operation.

Warning

Never ride an accessory equipped motorcycle, or a motorcycle carrying a payload of any kind, at speeds above 80 mph (130 km/h). In either/both of these conditions, speeds in excess of 80 mph (130 km/h) should not be attempted even where the legal speed limit permits this.

The presence of accessories and/or payload will cause changes in the stability and handling of the motorcycle.

Failure to allow for changes in motorcycle stability may lead to loss of control or an accident. Remember that the 80 mph (130 km/h) absolute limit will reduce by the fitting of non-approved accessories, incorrect loading, worn tyres, overall motorcycle condition and poor road or weather conditions.

Warning

This motorcycle must not be operated above the legal road speed limit except in authorised closed-course conditions.

Warning

Only operate this Triumph motorcycle at high speed in closed-course on-road competition or on closed-course racetracks. High-speed operation should only then be attempted by riders who have been instructed in the techniques necessary for high-speed riding and are familiar with the motorcycle's characteristics in all conditions.

High-speed operation in any other circumstances is dangerous and will lead to loss of motorcycle control and an accident.

Warning

Your passenger should be instructed that he or she can cause loss of motorcycle control by making sudden movements or by adopting an incorrect seated position.

The rider should instruct the passenger as follows:

- It is important that the passenger sits still while the motorcycle is in motion and does not interfere with the operation of the motorcycle.
- To keep his or her feet on the passenger footrests and to firmly hold onto the seat strap or the rider's waist or hips.
- Advise the passenger to lean with the rider when travelling around corners and not to lean unless the rider does so.

Warning

Do not carry animals on your motorcycle.

An animal could make sudden and unpredictable movements that could lead to loss of motorcycle control and an accident.

Warning

The handling and braking capabilities of a motorcycle will be affected by the presence of a passenger. The rider must make allowances for these changes when operating the motorcycle with a passenger and should not attempt such operation unless trained to do so and without becoming familiar and comfortable with the changes in motorcycle operating characteristics that this brings about.

Motorcycle operation without making allowances for the presence of a passenger could lead to loss of motorcycle control and an accident.

Warning

Never attempt to store any items between the frame and the fuel tank. This can restrict the steering and will cause loss of control leading to an accident.

Weight attached to the handlebar or front fork will increase the mass of the steering assembly and can result in loss of steering control leading to an accident.

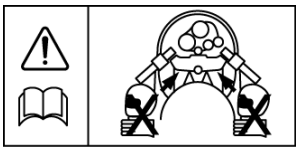

Warning

Do not carry a passenger unless he or she is tall enough to reach the footrests provided.

A passenger who is not tall enough to reach the footrests will be unable to sit securely on the motorcycle and may cause instability leading to loss of control and an accident.

Warning

If the passenger seat is used to carry small objects, they must not exceed 5 kg in weight, must not impair control of the motorcycle, must be securely attached and must not extend beyond the rear or sides of the motorcycle.

Carriage of objects in excess of 5 kg in weight, that are insecure, impair control or extend beyond the rear or sides of the motorcycle may lead to loss of motorcycle control and an accident.

Even if small objects are correctly loaded onto the rear seat, the maximum speed of the motorcycle must be reduced to 80 mph (130 km/h).

Caution

Do not allow luggage to rest on or against the upper portion of the rear bodywork.

Allowing luggage to rest on or against the upper portion of the rear bodywork could close the air gap between the bodywork and the exhaust potentially causing the bodywork to become damaged by overheating.

This page intentionally left blank

MAINTENANCE AND ADJUSTMENT

Table of Contents

Scheduled Maintenance 64
Side Panel 67
Removal 67
Side Panel Refitting 67
Engine Oil 67
Oil Level Inspection 68
Oil and Oil Filter Change 69
Disposal of Used Engine Oil and Oil Filters 70
Oil Specification and Grade 70
Cooling System 70
Corrosion Inhibitors 70
Coolant Level Inspection 71
Coolant Level Adjustment 72
Coolant Change 72
Radiator and Hoses 73
Throttle Control 73
Inspection 74
Adjustment 74
Clutch 75
Inspection 76
Adjustment 76
Drive Chain 76
Chain Lubrication 77
Chain Free-Movement Inspection 77
Chain Free-Movement Adjustment 78
Chain and Sprocket Wear Inspection 79
Brakes 80
Brake Wear Inspection 80
Brake Pad Wear Compensation 80
Disc Brake Fluid 81
Brake Fluid Level Inspection and Adjustment 82

Brake Light Switches . . . 83
Windscreen Cleaning . . . 84
Steering/Wheel Bearings . . . 85
Steering Inspection . . . 85
Inspecting the Steering (Headstock) Bearings for Free Play . . . 85
Wheel Bearings Inspection . . . 85
Front Suspension . . . 86
Front Fork Inspection . . . 86
Suspension Setting Chart . . . 87
Front Suspension Settings . . . 87
Spring Pre-Load Adjustment . . . 88
Rear Suspension Adjustment . . . 88
Rebound Damping Unit . . . 88
Spring Pre-Load Adjustment . . . 89
Tyres . . . 89
Tyre Inflation Pressures . . . 90
Tyre Wear . . . 90
Minimum Recommended Tread Depth . . . 90
Tyre Replacement . . . 91
Battery . . . 93
Battery Removal . . . 94
Battery Disposal . . . 94
Battery Maintenance . . . 94
Battery Discharge . . . 94
Battery Discharge During Storage and Infrequent Use of the Motorcycle . . . 95
Battery Charging . . . 95
Battery Installation . . . 96
Fuse Box . . . 96
Fuse Identification . . . 97
Headlights . . . 98
Headlight Adjustment . . . 98
Main Beam Horizontal Adjustment . . . 99
Main Beam Vertical Adjustment . . . 99
Dipped Headlight Vertical Adjustment . . . 99
Dipped Headlight Horizontal Adjustment . . . 100

Dipped Headlight Bulb Replacement 100
Main Beam Bulb Replacement 101
Position Lamp Bulb Replacement 101
Rear Light 102
Direction Indicator Lights 102
Front Indicator Bulb Replacement. 102
Rear Indicator Bulb Replacement 103
Licence Plate Light 103
Bulb Replacement 103
Cleaning 104
Preparation for Washing 104
Where to be Careful 104
After Washing 105
Unpainted Aluminium Items. 105
Cleaning of the Exhaust System 105
Washing 106
Drying 106
Protecting. 106

Scheduled Maintenance

To maintain the motorcycle in a safe and reliable condition, the maintenance and adjustments outlined in this section must be carried out as specified in the schedule of daily checks, and also in line with the scheduled maintenance chart. The information that follows describes the procedures to follow when carrying out the daily checks and some simple maintenance and adjustment items.

Warning

Special tools, knowledge and training are required in order to correctly carry out the maintenance items listed in the scheduled maintenance chart. Only an authorised Triumph dealer will have this knowledge and equipment.

Since incorrect or neglected maintenance can lead to a dangerous riding condition, always have an authorised Triumph dealer carry out the scheduled maintenance of this motorcycle.

Warning

All maintenance is vitally important and must not be neglected. Incorrect maintenance or adjustment may cause one or more parts of the motorcycle to malfunction. A malfunctioning motorcycle may lead to loss of control and an accident.

Weather, terrain and geographical location affects maintenance. The maintenance schedule should be adjusted to match the particular environment in which the vehicle is used and the demands of the individual owner.

Since incorrect or neglected maintenance can lead to a dangerous riding condition, always have an authorised Triumph dealer carry out the scheduled maintenance of this motorcycle.

Triumph Motorcycles cannot accept any responsibility for damage or injury resulting from incorrect maintenance or improper adjustment carried out by the owner.

Operation Description	Odometer Reading in Miles (Kms) or Time Period, whichever comes first						
		First Service	A Service	B Service	C Service	D Service	A Service
	Every	500 (800) 1 month	6,000 (10,000) 1 year	12,000 (20,000) 2 years	18,000 (30,000) 3 years	24,000 (40,000) 4 years	30,000 (50,000) 5 years
Engine and oil cooler - check for leaks	Day	•	•	•	•	•	•
Engine oil - renew	-	•	•	•	•	•	•
Engine oil filter - renew	-	•	•	•	•	•	•
Valve clearances - check/adjust	-			•		•	
Air cleaner - renew	-			•		•	
Engine and ABS ECMs - check for stored DTCs	-	•	•	•	•	•	•
Spark plugs - check	-		•		•		•
Spark plugs - renew	-			•		•	
Throttle bodies - balance	-		•	•	•	•	•
Throttle cables - check/adjust	Day	•	•	•	•	•	•
Cooling system - check for leaks	Day	•	•	•	•	•	•
Coolant level - check/adjust	Day	•	•	•	•	•	•
Coolant - renew	-			•		•	
Fuel system - check for leaks, chafing etc.	Day	•	•	•	•	•	•
Lights, instruments and electrical systems - check	Day	•	•	•	•	•	•
Steering - check for free operation	Day	•	•	•	•	•	•
Headstock bearings - check/adjust	-		•	•	•	•	•
Headstock bearings - lubricate	-			•		•	
Forks - check for leaks/smooth operation	Day	•	•	•	•	•	•
Fork oil - renew	-						•

Operation Description	Odometer Reading in Miles (Kms) or Time Period, whichever comes first						
		First Service	A Service	B Service	C Service	D Service	A Service
	Every	500 (800) 1 month	6,000 (10,000) 1 year	12,000 (20,000) 2 years	18,000 (30,000) 3 years	24,000 (40,000) 4 years	30,000 (50,000) 5 years
Brake fluid levels - check	Day	•	•	•	•	•	•
Brake fluid - renew	Every 2 years						
Brake pad - check wear levels	Day	•	•	•	•	•	•
Brake master cylinders - check for fluid leaks		•	•	•	•	•	•
Brake calipers - check for fluid leaks and seized pistons		•	•	•	•	•	•
Drive chain - lubricate	Every 200 miles (300 kms)						
Drive chain - wear check	Every 500 miles (800 kms)						
Drive chain slack - check/adjust	Day	•	•	•	•	•	•
Drive rubbing strip - check	-		•	•	•	•	•
Rear wheel bearing - lubricate	-			•		•	
Wheels - inspect for damage	Day	•	•	•	•	•	•
Tyre wear/tyre damage - check	Day	•	•	•	•	•	•
Tyre pressures - check/adjust	Day	•	•	•	•	•	•
Clutch cable - check/adjust	Day	•	•	•	•	•	•
Secondary air injection system - check/clean	-			•		•	
Stand - check operation	Day	•	•	•	•	•	•
Secondary exhaust to header clamp bolt - check/adjust	-	•	•	•	•	•	•
Fasteners - inspect visually for security	Day	•	•	•	•	•	•
Fuel and evaporative loss* hoses - renew	-					•	

*Evaporative system fitted to California models only.

Side Panel

Removal

Remove the seat.

Disconnect the battery, negative (black) lead first.

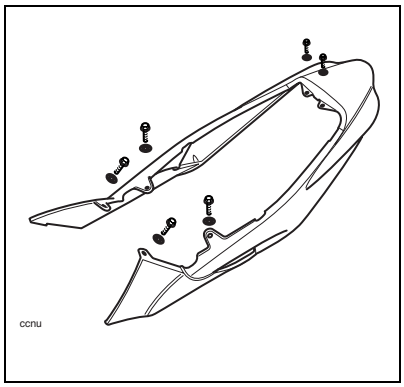

Remove the grab rail.

Release the fixings as shown in the diagram above.

Gently pull the panel outwards using hand pressure only. Lift and withdraw the side panel assembly in a rearward direction.

Side Panel Refitting

Reverse the removal procedure with the exception of the following:

Reconnect the battery, positive (red) lead first.

Tighten the panel fixings to **3 Nm**.

Tighten grab rail fixings to **27 Nm**.

Engine Oil

In order for the engine, transmission, and clutch to function correctly, maintain the engine oil at the correct level, and change the oil and oil filter in accordance with scheduled maintenance requirements.

Warning

Motorcycle operation with insufficient, deteriorated, or contaminated engine oil will cause accelerated engine wear and may result in engine or transmission seizure. Seizure of the engine or transmission may lead to sudden loss of control and an accident.

Oil Level Inspection

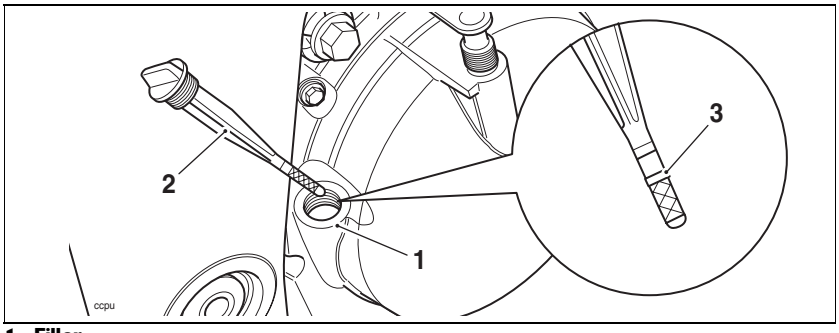

1. **Filler**
2. **Filler plug/Dipstick**
3. **Upper marking**

Note:

- **An accurate indication of the level of oil in the engine is only shown when the engine oil is at normal operating temperature, the motorcycle is upright (not on the side stand) and the filler plug/dipstick has been fully screwed home.**

Warning

Never start the engine or run the engine in a confined area. Exhaust fumes are poisonous and can cause loss of consciousness and death within a short period of time. Always operate your motorcycle in the open-air or in an area with adequate ventilation.

Caution

Running the engine with insufficient oil will cause engine damage. If the low oil pressure indicator remains on, stop the engine immediately and investigate the cause.

Start the engine and run at idle for approximately five minutes.

Stop the engine and wait for three minutes to allow the oil to settle.

With the motorcycle upright, remove the filler plug/dipstick, wipe the blade clean and screw it fully home.

Remove the filler plug/dipstick.

The oil level is indicated by lines on the filler plug/dipstick. When full, the indicated oil level must be level with the upper marking on the dipstick.

If the oil level is below the lower marking, add oil a little at a time until the correct level is reached. Once the correct level is reached, re-fit the filler plug/dipstick.

Oil and Oil Filter Change

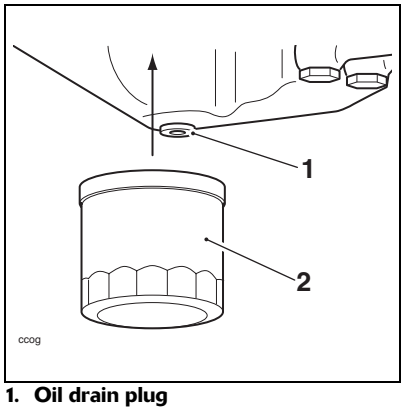

1. **Oil drain plug**
2. **Oil filter**

The engine oil and filter must be replaced in accordance with scheduled maintenance requirements.

Warning

Prolonged or repeated contact with engine oil can lead to skin dryness, irritation and dermatitis. In addition, used engine oil contains harmful contamination that can lead to skin cancer. Always wear suitable protective clothing and avoid skin contact with used oil.

Warm up the engine thoroughly, and then stop the engine and secure the motorcycle in an upright position on level ground.

Place an oil drain pan beneath the engine.

Remove the oil drain plug.

Warning

The oil may be hot to the touch. Avoid contact with the hot oil by wearing suitable protective clothing, gloves, eye protection, etc. Contact with hot oil may cause the skin to be scalded or burned.

Unscrew and remove the oil filter using Triumph service tool T3880313. Dispose of the old filter in an environmentally friendly way.

After the oil has completely drained out, fit a new sealing washer to the drain plug. Fit and tighten the drain plug to **25 Nm**.

Apply a thin smear of clean engine oil to the sealing ring of the new oil filter. Fit the oil filter and tighten to **10 Nm**.

Fill the engine to the maximum mark with a 10W/40 or 15W/50 semi or fully synthetic motorcycle engine oil that meets specification API SH (or higher) AND JASO MA.

Start the engine and allow it to idle for a minimum of 30 seconds.

Caution

Raising the engine speed above idle before the oil reaches all parts of the engine can cause engine damage or seizure. Only raise engine speed after running the engine for 30 seconds to allow the oil to circulate fully.

Caution

If the engine oil pressure is too low, the low oil pressure warning light will illuminate. If this light stays on when the engine is running, stop the engine immediately and investigate the cause. Running the engine with low oil pressure will cause engine damage.

Ensure that the low oil pressure warning light extinguishes shortly after starting.

Turn off the ignition, check the oil level using the method previously described, and top up to between the minimum and maximum level lines on the dipstick.

Disposal of Used Engine Oil and Oil Filters

To protect the environment, do not pour oil on the ground, down sewers or drains, or into watercourses. Do not place used oil filters in with general waste. If in doubt, contact your local authority.

Oil Specification and Grade

Triumph high performance fuel injected engines are designed to use 10W/40 or 15W/50 semi or fully synthetic motorcycle engine oil that meets specification API SH (or higher) AND JASO MA.

Do not add any chemical additives to the engine oil. The engine oil also lubricates the clutch and any additives could cause the clutch to slip.

Do not use mineral, vegetable, non-detergent oil, castor based oils or any oil not conforming to the required specification. The use of these oils may cause instant, severe engine damage.

Cooling System

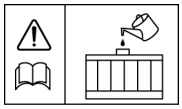

To ensure efficient engine cooling, check the coolant level each day before riding the motorcycle, and top up the coolant if the level is low.

Caution

A year-round type of anti-freeze is installed in the cooling system when the motorcycle leaves the factory. It is coloured green, contains a 50% solution of ethylene glycol, and has a freezing point of -35°C (-31°F).

Corrosion Inhibitors

To protect the cooling system from corrosion, the use of corrosion inhibitor chemicals in the coolant is essential.

If coolant containing a corrosion inhibitor is not used, the cooling system will accumulate rust and scale in the water jacket and radiator. This will block the coolant passages, and considerably reduce the efficiency of the cooling system.

The anti-freeze recommended in the Specification section, mixed 50/50 with distilled water will provide the necessary corrosion inhibition.

Warning

Always use the anti-freeze in accordance with the instructions of the manufacturer.

Coolant mixture that contains anti-freeze and corrosion inhibitors contains toxic chemicals that are harmful to the human body. Never swallow anti-freeze or any of the motorcycle coolant.

Distilled water must be used to dilute coolant to the correct mixture ratio.

In an emergency, tap water can be added to the cooling system. However, the coolant must then be changed and returned to the correct mixture ratio using distilled water and new coolant as soon as possible.

Caution

Distilled water must be used to dilute coolant to the correct mixture ratio. If hard water is used in the cooling system, it will cause scale accumulation in the engine and radiator and considerably reduce the efficiency of the cooling system. Reduced cooling system efficiency may cause the engine to overheat and suffer severe damage.

Coolant Level Inspection

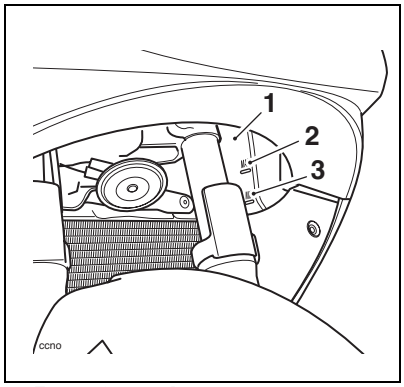

1. **Expansion tank**
2. **MAX mark**
3. **MIN mark**

Position the motorcycle on level ground and in an upright position. The expansion tank is located beneath removable panels on the left hand side of the front fairing.

The coolant level in the expansion tank can be checked by looking up and through the centre opening of the front fairing. The level can also be checked from above by looking down to the left.

Check the coolant level in the expansion tank. The coolant level must be between the MAX and MIN marks. If the coolant is below the minimum level, the coolant level must be adjusted.

Coolant Level Adjustment

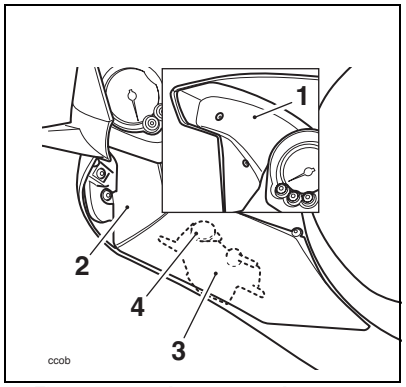

1. **First cover to be removed**
2. **Second cover to be removed**
3. **Expansion tank**
4. **Tank cap**

Warning

Do not remove the expansion tank or radiator pressure cap when the engine is hot. When the engine is hot, the coolant inside the radiator will be hot and also under pressure. Contact with this hot, pressurised coolant will cause scalds and skin damage.

Allow the engine to cool.

Remove the first cover.

Remove the second cover to expose the expansion tank.

Remove the cap from the expansion tank and add coolant mixture through the filler opening until the level reaches the MAX mark. Refit the cap.

Note:

- **If the coolant level is being checked because the coolant has overheated, also check the level in the radiator and top up if necessary.**
- **In an emergency, water alone can be added to the cooling system. However, the coolant must then be changed and returned to the correct mixture ratio using distilled water and new coolant as soon as possible.**

Refit the removable panels.

Coolant Change

Have the coolant changed by an authorised Triumph dealer in accordance with scheduled maintenance requirements.

Radiator and Hoses

Check the radiator hoses for cracks or deterioration, and hose clips for tightness in accordance with scheduled maintenance requirements. Have your authorised Triumph dealer replace any defective items.

Check the radiator grille and fins for obstructions by insects, leaves or mud. Clean off any obstructions with a stream of low-pressure water.

Warning

The fan operates automatically when the engine is running. Always keep hands and clothing away from the fan as contact with the rotating fan can cause injury.

Caution

Using high-pressure water sprays, such as from a car wash facility or household pressure washer, can damage the radiator fins, cause leaks and impair the radiator's efficiency.

Do not obstruct or deflect airflow through the radiator by installing unauthorised accessories, either in front of the radiator or behind the cooling fan. Interference with the radiator airflow can cause overheating, potentially resulting in engine damage.

Throttle Control

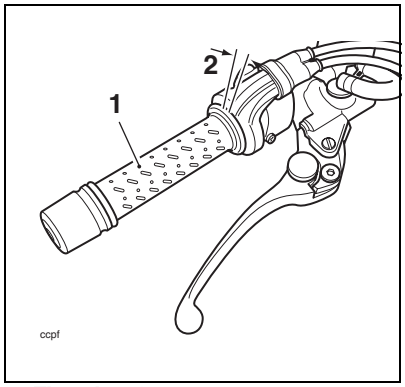

1. **Throttle grip**
2. **2 - 3 mm**

Warning

The throttle grip controls the throttle valves in the throttle bodies. If the throttle cables are incorrectly adjusted, either too tight or too loose, the throttle may be difficult to control and performance will be adversely affected.

Check the throttle grip free play in accordance with scheduled maintenance requirements and make adjustments as necessary.

Warning

Always be alert for changes in the 'feel' of the throttle and have the throttle system checked by an authorised Triumph dealer if any changes are detected. Changes can be due to wear in the mechanism, which could lead to a sticking throttle.

An incorrectly adjusted, sticking or stuck throttle will lead to loss of motorcycle control and an accident.

Inspection

Warning

Use of the motorcycle with incorrectly adjusted, incorrectly routed, sticking or damaged throttle cables will interfere with the throttle function resulting in loss of motorcycle control and an accident.

To avoid incorrect adjustment, incorrect routing, or continued use of a sticking or damaged throttle, always have your throttle checked and adjusted by your authorised Triumph dealer.

Check that the throttle opens smoothly, without undue force and that it closes without sticking. Have your authorised Triumph dealer check the throttle system if a problem is detected or any doubt exists.

Check that there is 2 - 3 mm of throttle grip free play when lightly turning the throttle grip back and forth.

If there is an incorrect amount of free play, Triumph recommends that you have adjustments made by your authorised Triumph dealer. However, in an emergency, throttle adjustment may be made as follows:

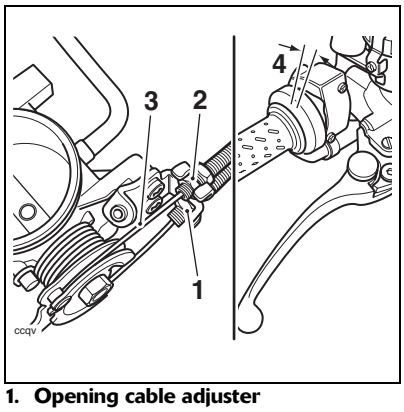

1. **Opening cable adjuster**
2. **Closing cable adjuster**
3. **Closing cable – free play measurement point**
4. **Opening cable – free play measurement point**

Adjustment

Remove the seat.

Disconnect the battery, negative (black) lead first.

Remove the fuel tank and airbox.

Release the locknut on the 'opening' cable adjuster.

Rotate the 'opening' cable adjuster at the twist grip end such that it has an equal amount of adjustment in each direction.

Rotate the 'opening' cable adjuster at the throttle body end of the cable to give 2 - 3 mm of play at the twist grip. Tighten the locknut.

Make any minor adjustments as necessary to give 2 - 3 mm of play using the adjuster near

the twist grip end of the cable. Tighten the locknut.

With the throttle fully closed, ensure that there is 2 - 3 mm of free play in the 'closing' cable at the throttle cam attached to the throttle bodies. If necessary, adjust in the same way as the 'opening' cable until 2 - 3 mm of play is present.

Warning

Ensure that all the adjuster locknuts of all cables are tightened, as a loose locknut could result in a sticking throttle.

An incorrectly adjusted, sticking or stuck throttle can lead to loss of motorcycle control and an accident.

Refit the fuel tank and airbox.

Reconnect the battery, positive (red) lead first.

Refit the seats.

Check that the throttle opens smoothly, without undue force and that it closes without sticking.

Ride carefully to your nearest authorised Triumph dealer and have him check the throttle system thoroughly before riding again.

Clutch

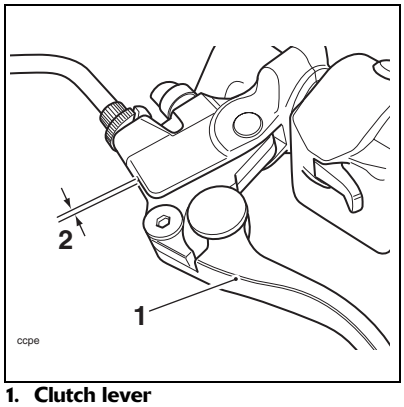

1. **Clutch lever**
2. **2 - 3 mm**

The motorcycle is equipped with a cable-operated clutch.

If the clutch lever has excessive free play, the clutch may not disengage fully. This will cause difficulty in changing gear and selecting neutral. This may cause the engine to stall and make the motorcycle difficult to control. Conversely, if the clutch lever has insufficient free play the clutch may not engage fully, causing the clutch to slip, which will reduce performance and cause premature clutch wear.

Clutch lever free play must be checked in accordance with scheduled maintenance requirements.

Inspection

Check that there is 2 - 3 mm clutch lever free play at the lever.

If there is an incorrect amount of free play, adjustments must be made.

Adjustment

Loosen the knurled locknut at the lever end of the clutch cable and turn the adjuster sleeve until the correct amount of clutch lever free play is achieved.

Tighten the knurled locknut against the clutch lever assembly.

If correct adjustment cannot be made using the lever adjuster, use the cable adjuster at the lower end of the cable.

Loosen the adjuster locknut.

Turn the outer cable adjuster to give 2 - 3 mm of free play at the clutch lever.

Tighten the locknut.

Drive Chain

For safety and to prevent excessive wear, the drive chain must be checked, adjusted and lubricated in accordance with scheduled maintenance requirements. Checking, adjustment and lubrication must be carried out more frequently for extreme conditions such as salty or heavily gritted roads.

If the chain is badly worn or incorrectly adjusted (either too loose or too tight) the chain could jump off the sprockets or break. Therefore, always replace worn or damaged chains using genuine Triumph parts supplied by an authorised Triumph dealer.

Warning

A loose or worn chain, or a chain that breaks or jumps off the sprockets could catch on the engine sprocket or lock the rear wheel.

A chain that catches on the engine sprocket will injure the rider and lead to loss of motorcycle control and an accident.

Similarly, locking the rear wheel will lead to loss of motorcycle control and an accident.

Chain Lubrication

Lubrication is necessary every 200 miles and also after riding in wet weather, on wet roads, or any time that the chain appears dry.

Use the special chain lubricant as recommended in the Specification section.

Apply lubricant to the sides of the rollers then allow the motorcycle to stand unused for at least 8 hours (overnight is ideal). This will allow the oil to penetrate to the chain O-rings etc.

Before riding, wipe off any excess oil.

If the chain is especially dirty, clean first and then apply oil as mentioned above.

Caution

Do not use a pressure wash to clean the chain as this may cause damage to the chain components.

Chain Free-Movement Inspection

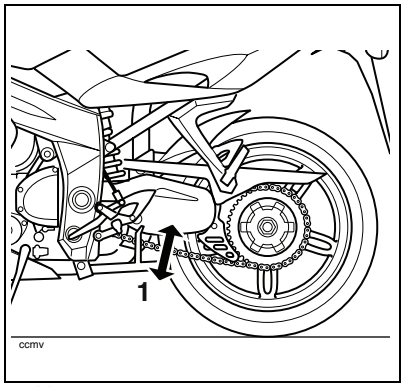

1. Maximum movement position

Warning

Before starting work, ensure the motorcycle is stabilised and adequately supported. This will help prevent injury to the operator or damage to the motorcycle.

Park the motorcycle on the side stand.

Rotate the rear wheel to find the position where the chain is tightest, and measure the vertical movement of the chain midway between the sprockets.

The vertical movement of the drive chain must be in the range 35 - 40 mm.

Chain Free-Movement Adjustment

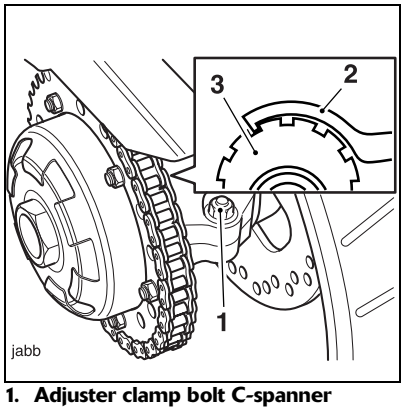

1. **Adjuster clamp bolt C-spanner**
2. **Eccentric adjuster**

Loosen the adjuster clamp bolt.

Using the C-spanner supplied in the tool kit, turn the rear hub/eccentric adjuster (clockwise to loosen, anti-clockwise to tighten) until the drive chain is correctly adjusted.

Tighten the clamp bolt to **55 Nm**.

Repeat the chain adjustment check. Re-adjust if necessary.

Warning

Operation of the motorcycle with an insecure rear hub/eccentric adjuster clamp bolt may result in impaired stability and handling of the motorcycle. This impaired stability and handling may lead to loss of control or an accident.

Check the rear brake effectiveness.

Warning

It is dangerous to operate the motorcycle with defective brakes and you must have your authorised Triumph dealer take remedial action before you attempt to ride the motorcycle again. Failure to take remedial action may reduce braking efficiency leading to loss of control or an accident.

Chain and Sprocket Wear Inspection

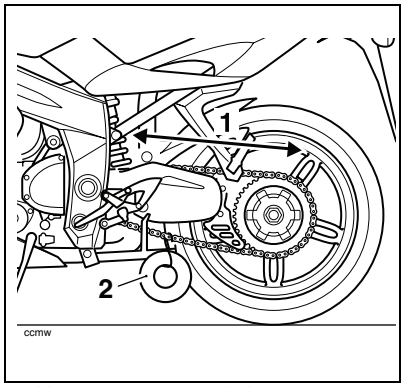

1. **Measure across 20 links**
2. **Weight**

Remove the chain guards.

Stretch the chain taut by hanging a 10 - 20 kg weight on the chain.

Measure the length of 20 links on the straight part of the chain from pin centre of the 1st pin to the pin centre of the 21st pin. Since the chain may wear unevenly, take measurements in several places.

If the length exceeds the maximum service limit of 321 mm, the chain must be replaced.

Rotate the rear wheel and inspect the drive chain for damaged rollers, and loose pins and links.

Also inspect the sprockets for unevenly or excessively worn or damaged teeth.

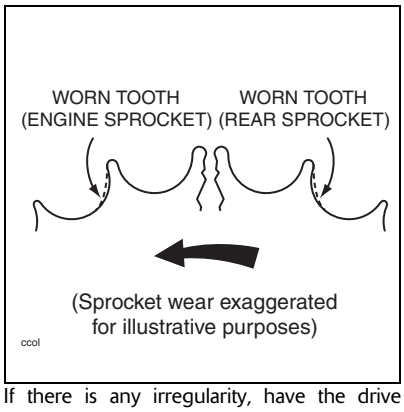

If there is any irregularity, have the drive chain and/or the sprockets replaced by an authorised Triumph dealer.

Replace the chain guards.

Warning

The use of non-approved chains may result in a broken chain or may cause the chain to jump off the sprockets.

Use a genuine Triumph supplied chain as specified in the Triumph parts catalogue.

Never neglect chain maintenance and always have chains installed by an authorised Triumph dealer.

Caution

If the sprockets are found to be worn, always replace the sprockets and drive chain together.

Replacing worn sprockets without also replacing the chain will lead to premature wear of the new sprockets.

Brakes

Brake Wear Inspection

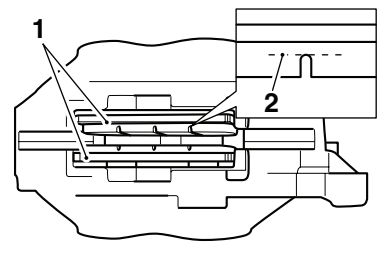

1. **Brake pads**
2. **Minimum thickness line**

Brake pads must be inspected in accordance with scheduled requirements and replaced if worn to, or beyond the minimum service thickness.

If the lining thickness of any pad (front or rear brakes) is less than 1.5 mm (0.06 in), that is, if the pad has worn down to the bottom of the grooves, replace all the pads on the wheel.

Warning

Brake pads must always be replaced as a wheel set. At the front, where two calipers are fitted on the same wheel, replace all the brake pads in both calipers.

Replacing individual pads will reduce braking efficiency and may cause an accident.

After replacement brake pads have been fitted, ride with extreme caution until the new pads have 'broken in'.

Brake Pad Wear Compensation

Disc and brake pad wear is automatically compensated for and has no effect on the brake lever or pedal action. There are no parts that require adjustment on the front and rear brakes.

Warning

If the brake lever or pedal feels soft when it is applied, or if the lever/pedal travel becomes excessive, there may be air in the brake pipes and hoses or the brakes may be defective.

It is dangerous to operate the motorcycle under such conditions and your authorised Triumph dealer must rectify the fault before riding.

Riding with defective brakes may lead to loss of motorcycle control and an accident.

Disc Brake Fluid

Inspect the level of brake fluid in both reservoirs and change the brake fluid in accordance with scheduled maintenance requirements. Use only DOT 4 fluid as recommended in the Specification section. The brake fluid must also be changed if it becomes, or is suspected of having become contaminated with moisture or any other contaminants.

Warning

Brake fluid is hygroscopic which means it will absorb moisture from the air.

Any absorbed moisture will greatly reduce the boiling point of the brake fluid causing a reduction in braking efficiency.

Because of this, always replace brake fluid in accordance with scheduled maintenance requirements.

Always use new brake fluid from a sealed container and never use fluid from an unsealed container or from one which has been previously opened.

Do not mix different brands or grades of brake fluid.

Check for fluid leakage around brake fittings, seals and joints and also check the brake hoses for splits, deterioration and damage.

Always rectify any faults before riding.

Failure to observe and act upon any of these items may cause a dangerous riding condition leading to loss of control and an accident.

Warning

If the ABS is not functioning, the brake system will continue to function as a standard non-ABS braking system. In this situation, braking too hard will cause the wheels to lock resulting in loss of control and an accident.

Reduce speed and do not continue to ride for longer than is necessary with the indicator light illuminated. Contact an authorised Triumph dealer as soon as possible to have the fault checked and rectified.

Warning

Failure to observe and act upon any of these items may cause a dangerous riding condition leading to loss of control and an accident.

Note:

- **On models fitted with ABS, a special tool is required to bleed the braking system. Contact your authorised Triumph dealer when the brake fluid needs renewing or the hydraulic system requires maintenance.**

Brake Fluid Level Inspection and Adjustment

Front Brake

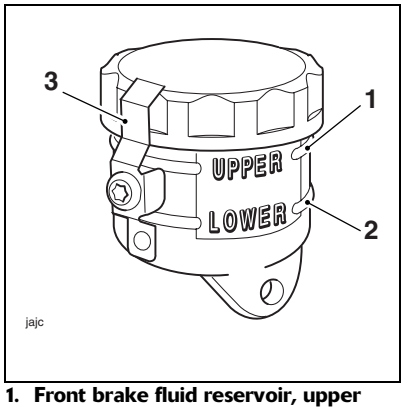

1. **Front brake fluid reservoir, upper level line**
2. **Lower level line**
3. **Safety clip**

The brake fluid level in the reservoirs must be kept between the upper and lower level lines (reservoir held horizontal).

Remove the safety clip (front only).

Remove the reservoir cover.

Fill the reservoir to the upper level line using new DOT 4 fluid from a sealed container.

Refit the reservoir cover ensuring that the diaphragm seal is correctly fitted.

Refit the safety clip.

Warning

If there has been an appreciable drop in the level of the fluid in either fluid reservoir, consult your authorised Triumph dealer for advice before riding. Riding with depleted brake fluid levels, or with a brake fluid leak is dangerous and will cause reduced brake performance potentially leading to loss of motorcycle control and an accident.

Rear Brake

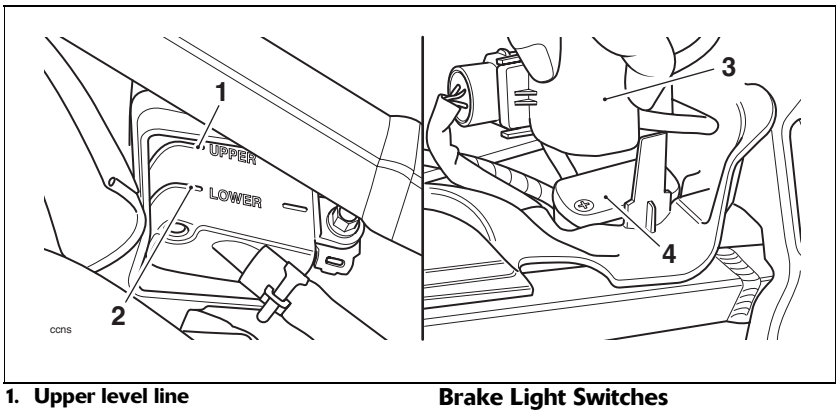

1. **Upper level line**
2. **Lower level line**
3. **Starter solenoid/Main fuse assembly**
4. **Rear brake fluid reservoir**

Remove the seat.

Disconnect the battery, negative (black) lead first.

The starter solenoid and main fuse are attached to a rubber mounting. This mounting fits over the rear brake fluid reservoir filler cap.

To gain access to the filler cap, gently pull off the starter solenoid/main fuse assembly with the rubber mounting.

Remove the reservoir cap. Fill the reservoir to the upper level line using new DOT 4 fluid from a sealed container.

Refit the reservoir cap ensuring that the diaphragm seal is correctly fitted.

Refit the starter solenoid/main fuse assembly.

Reconnect the battery, positive (red) lead first.

Refit the seat.

Brake Light Switches

The brake light is activated independently by either the front or rear brake. If, with the ignition in the ON position, the brake light does not work when the front brake lever is pulled or the rear brake pedal is pressed, have your authorised Triumph dealer investigate and rectify the fault.

Warning

Riding the motorcycle with defective brake lights is illegal and dangerous.

An accident causing injury to the rider and other road users may result from use of a motorcycle with defective brake lights.

Windscreen Cleaning

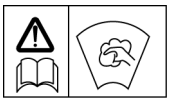

Clean the windscreen with a solution of mild soap or detergent and lukewarm water. After cleaning, rinse well and then dry with a soft, lint free cloth.

Caution

Products such as window cleaning fluids, insect remover, rain repellent, scouring compounds, petrol or strong solvents such as alcohol, acetone, carbon tetrachloride, etc. will damage the windscreen. Never allow these products to contact the windscreen.

If the transparency of the windscreen is reduced by scratches or oxidation which cannot be removed, the windscreen must be replaced.

Warning

Never attempt to clean the windscreen while the motorcycle is in motion as releasing the handlebars may cause loss of vehicle control and an accident.

Operation of the motorcycle with a damaged or scratched windscreen will reduce the rider's forward vision. Any such reduction in forward vision is dangerous and may lead to an accident causing injury or death.

Caution

Corrosive chemicals such as battery acid will damage the windscreen. Never allow corrosive chemicals to contact the windscreen.

Steering/Wheel Bearings

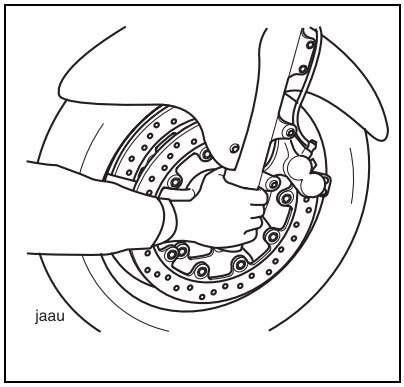

Steering Inspection

Lubricate and inspect the condition of the headstock (steering) bearings in accordance with scheduled maintenance requirements.

Note:

- **Always inspect the wheel bearings at the same time as the steering bearings.**

Warning

To prevent risk of injury from the motorcycle falling during the inspection, ensure that the motorcycle is stabilised and secured on a suitable support. Do not exert extreme force against each wheel or rock each wheel vigorously as this may cause the motorcycle to become unstable and cause injury by falling from its support.

Ensure that the position of the support block will not cause damage to the sump.

Inspecting the Steering (Headstock) Bearings for Free Play

Position the motorcycle on level ground, in an upright position.

Raise the front wheel above the ground and support the motorcycle.

Standing at the front of the motorcycle, hold the lower end of the front forks and try to move them forward and backward.

If any free play can be detected in the steering (headstock) bearings, ask your authorised Triumph dealer to inspect and rectify any faults before riding.

Warning

Riding the motorcycle with incorrectly adjusted or defective steering (headstock) bearings is dangerous and may cause loss of motorcycle control and an accident.

Remove the support and place the motorcycle on the side stand.

Wheel Bearings Inspection

If the wheel bearings in the front or rear wheel allow play in the wheel hub, are noisy, or if the wheel does not turn smoothly, have your authorised Triumph dealer inspect the wheel bearings.

The wheel bearings must be inspected at the intervals specified in the scheduled maintenance chart.

Position the motorcycle on level ground, in an upright position.

Raise the front wheel above the ground and support the motorcycle.

Standing at the side of the motorcycle, gently rock the top of the front wheel from side to side.

If any free play can be detected, ask your authorised Triumph dealer to inspect and rectify any faults before riding.

Reposition the lifting device and repeat the procedure for the rear wheel.

Warning

Operation with worn or damaged front or rear wheel bearings is dangerous and may cause impaired handling and instability leading to an accident. If in doubt, have the motorcycle inspected by an authorised Triumph dealer before riding.

Remove the support and place the motorcycle on the side stand.

Front Suspension

Front Fork Inspection

Examine each fork for any sign of damage, scratching of the slider surface, or for oil leaks.

If any damage or leakage is found, consult an authorised Triumph dealer.

To check that the forks operate smoothly:

- Position the motorcycle on level ground.
- While holding the handlebars and applying the front brake, pump the forks up and down several times.
- If roughness or excessive stiffness is detected, consult your authorised Triumph dealer.
- The suspension movement will be affected by adjustment settings.

Warning

Riding the motorcycle with defective or damaged suspension is dangerous and may lead to loss of control and an accident.

Warning

Never attempt to dismantle any part of the suspension units, as all units contain pressurised oil. Skin and eye damage can result from contact with the pressurised oil.

Suspension Setting Chart

LOADING		FRONT	REAR	
		Spring Pre-Load +	Rebound Damping*	Spring Pre-Load **
Solo Riding	Standard	10	1.50	25.00
	Softer	11	2.00	29.00
	Firmer	9	1.00	21.00
Rider and Passenger or Rider and Luggage		8-9	0.50	15.00
Rider, Passenger and Luggage		7-8	0.50	05.00

+ mms above fork cap.
* Number of adjuster turns out from the fully screwed in position.
** Number of clicks out from the fully screwed in position.

Note:

- **This chart is only a guide. Setting requirements may vary for rider weight and personal preferences. See the following pages of how to adjust your suspension.**

Front Suspension Settings

The standard suspension settings provide a comfortable ride and good handling characteristics for general, solo riding. The chart shows suggested settings for the front and rear suspension.

Warning

Ensure that the correct balance between front and rear suspension is maintained. Suspension imbalance could significantly change handling characteristics leading to loss of control and an accident. Refer to the chart on the previous page for further information or consult your dealer.

The front suspension is adjustable for pre-load only. The spring pre-load adjusters are located at the top of each fork.

Warning

Ensure that the adjusters are set to the same setting on both forks. Settings which vary from left to right could significantly change handling characteristics leading to loss of control and an accident.

Note:

- **The setting figures above/over are all measured as adjuster turns from the fully screwed in position.**

Spring Pre-Load Adjustment

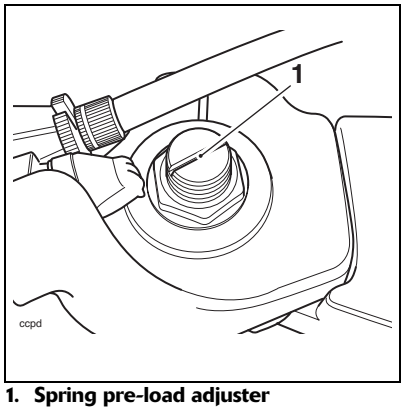

1. Spring pre-load adjuster

To change the spring pre-load, rotate the adjuster clockwise to increase pre-load, or anti-clockwise to decrease pre-load. Always set the pre-load adjusters such that there are an equal number of graduation lines visible on both forks.

Note:

- **The motorcycle is delivered from the factory with the spring pre-load set 10 mm out from the fully screwed in position.**

Rear Suspension Adjustment

The rear suspension unit is adjustable for rebound damping and spring pre-load.

Rebound Damping Unit

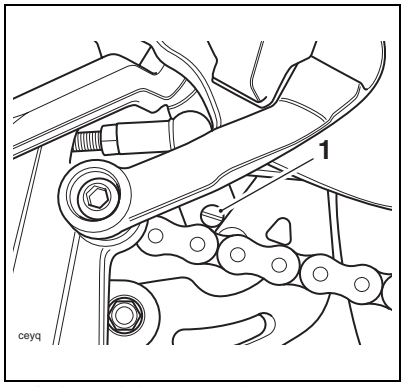

1. Rebound damping adjuster

The rebound damping adjuster is located at the bottom of the rear suspension unit on the left hand side of the motorcycle.

To adjust the rebound damping setting, rotate the adjuster clockwise to increase rebound damping and anti-clockwise to decrease.

Note:

- **The settings are all measured as the number of adjuster turns out from the fully screwed in position.**
- **The motorcycle is delivered from the factory with the rebound adjuster to 1.5 turns out from the fully screwed in position.**

Spring Pre-Load Adjustment

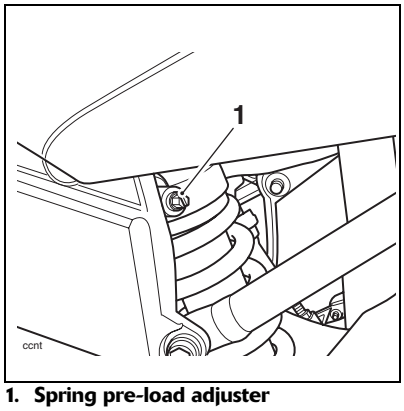

1. Spring pre-load adjuster

The spring pre-load adjuster is situated on the left hand side of the motorcycle, at the top of the rear suspension unit.

To adjust the spring pre-load setting rotate the slotted adjuster clockwise to increase, or anti-clockwise to decrease.

Note:

- **The settings are all measured by the number of adjuster 'clicks' out from the fully screwed in position.**
- **The motorcycle is delivered from the factory with the spring pre-load set to 25 'clicks' out from the fully screwed in position.**

Tyres

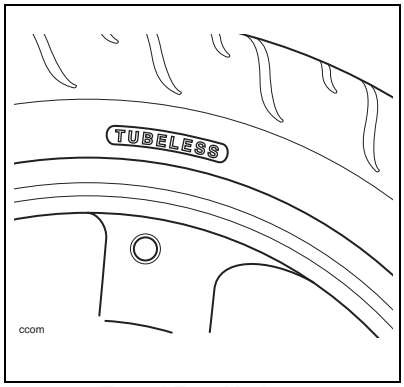

Typical Tyre Marking

This motorcycle is equipped with tubeless tyres, valves and wheel rims. Use only tyres marked 'TUBELESS' and tubeless valves on rims marked 'SUITABLE FOR TUBELESS TYRES'.

Tyre Inflation Pressures

Correct inflation pressure will provide maximum stability, rider comfort and tyre life. Always check tyre pressures before riding when the tyres are cold. Check tyre pressures daily and adjust if necessary. See the Specification section for details of the correct inflation pressures.

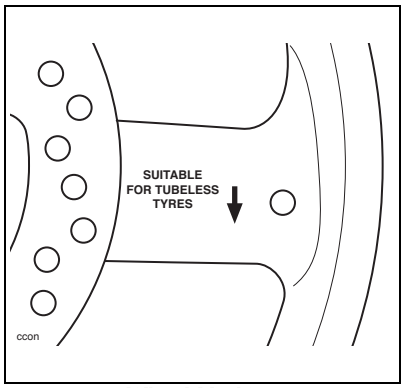

Wheel Marking

Warning

Incorrect tyre inflation will cause abnormal tread wear and instability problems that may lead to loss of control and an accident.

Under-inflation may result in the tyre slipping on, or coming off the rim. Over-inflation will cause instability and accelerated tread wear.

Both conditions are dangerous as they may cause loss of control leading to an accident.

Tyre Wear

As the tyre tread wears down, the tyre becomes more susceptible to punctures and failure. It is estimated that 90% of all tyre problems occur during the last 10% of tread life (90% worn). It is therefore not recommended to use tyres until they are worn to their minimum.

Minimum Recommended Tread Depth

In accordance with the periodic maintenance chart, measure the depth of the tread with a depth gauge, and replace any tyre that has worn to, or beyond the minimum allowable tread depth specified in the table below:

Under 130 km/h (80 mph)	2 mm (0.08 in)
Over 130 km/h (80 mph)	Rear 3 mm (0.12 in) Front 2 mm (0.08 in)

Warning

This motorcycle must not be operated above the legal road speed limit except in authorised closed-course conditions.

Warning

Only operate this Triumph motorcycle at high speed in closed-course on-road competition or on closed-course racetracks. High-speed operation should only then be attempted by riders who have been instructed in the techniques necessary for high-speed riding and are familiar with the motorcycle's characteristics in all conditions. High-speed operation in any other circumstances is dangerous and will lead to loss of motorcycle control and an accident.

Warning

Operation with excessively worn tyres is hazardous and will adversely affect traction, stability and handling which may lead to loss of control and an accident.

When tubeless tyres become punctured, leakage is often very slow. Always inspect tyres very closely for punctures. Check the tyres for cuts, embedded nails or other sharp objects. Operation with punctured or damaged tyres will adversely affect motorcycle stability and handling which may lead to loss of control or an accident.

Check the rims for dents or deformation. Operation with damaged or defective wheels or tyres is dangerous and loss of motorcycle control or an accident could result.

Always consult your authorised Triumph dealer for tyre replacement, or for a safety inspection of the tyres.

Tyre Replacement

All Triumph motorcycles are carefully and extensively tested in a range of riding conditions to ensure that the most effective tyre combinations are approved for use on each model. It is essential that approved tyres, fitted in approved combinations, are used when purchasing replacement tyres. The use of non-approved tyres, or approved tyres in non-approved combinations, may lead to motorcycle instability and an accident. On models fitted with ABS, different wheel speeds, caused by fitting non-approved tyres can affect the function of the ABS computer.

See the Specification section for details of approved tyre combinations. Always have tyres fitted and balanced by your authorised Triumph dealer who has the necessary training and skills to ensure safe, effective fitment.

Warning

On models fitted with ABS, the ABS computer operates by comparing the relative speed of the front and rear wheels. Use of non-recommended tyres can affect wheel speed and cause the ABS function not to operate, potentially leading to loss of control and an accident in conditions where the ABS would normally function.

Warning

If a tyre sustains a puncture, the tyre must be replaced. Failure to replace a punctured tyre, or operation with a repaired tyre can lead to instability, loss of control or an accident.

Warning

Do not install tube-type tyres on tubeless rims. The bead will not seat and the tyres could slip on the rims, causing rapid tyre deflation that may result in a loss of vehicle control and an accident. Never install an inner tube inside a tubeless tyre. This will cause friction inside the tyre and the resulting heat build-up may cause the tube to burst resulting in rapid tyre deflation, loss of vehicle control and an accident.

Warning

If tyre damage is suspected, such as after striking the kerb, ask your authorised Triumph dealer to inspect the tyre both internally and externally. Remember, tyre damage may not always be visible from the outside. Operation of the motorcycle with damaged tyres could lead to loss of control and an accident.

Warning

When replacement tyres are required, consult your authorised Triumph dealer who will arrange for the tyres to be selected, in a correct combination, from the approved list and fitted according to the tyre manufacturer's instructions.

When tyres are replaced, allow time for the tyres to seat to the rim (approximately 24 hours). During this seating period, ride cautiously as an incorrectly seated tyre could cause loss of control or an accident.

Initially, the new tyres will not produce the same handling characteristics as the worn tyres and the rider must allow adequate riding distance (approximately 100 miles) to become accustomed to the new handling characteristics.

24 hours after fitting, the tyre pressures must be checked and adjusted, and the tyres examined for correct seating. Rectification must be carried out as necessary.

The same checks and adjustments must also be carried out when 100 miles have been travelled after fitting.

Warning

Use of a motorcycle with incorrectly seated tyres, incorrectly adjusted tyre pressures, or when not accustomed to its handling characteristics may lead to loss of control and an accident.

Warning

Tyres that have been used on a rolling road dynamometer may become damaged. In some cases, the damage may not be visible on the external surface of the tyre. Tyres must be replaced after such use as continued use of a damaged tyre may lead to instability, loss of control and an accident.

Warning

Accurate wheel balance is necessary for safe, stable handling of the motorcycle. Do not remove or change any wheel balance weights. Incorrect wheel balance may cause instability leading to loss of control and an accident.

When wheel balancing is required, such as after tyre replacement, see your authorised Triumph dealer.

Only use self-adhesive weights. Clip-on weights may damage the wheel and tyre resulting in tyre deflation, loss of control and an accident.

Battery

Warning

Under some circumstances, the battery can give off explosive gases; keep sparks, flames and cigarettes away. Provide adequate ventilation when charging or using the battery in an enclosed space.

The battery contains sulphuric acid (battery acid). Contact with skin or eyes may cause severe burns. Wear protective clothing and a face shield.

If battery acid gets on your skin, flush with water immediately.

If battery acid gets in your eyes, flush with water for at least 15 minutes and SEEK MEDICAL ATTENTION IMMEDIATELY.

If battery acid is swallowed, drink large quantities of water and SEEK MEDICAL ATTENTION IMMEDIATELY.

KEEP BATTERY ACID OUT OF THE REACH OF CHILDREN.

Warning

The battery contains harmful materials. Always keep children away from the battery whether or not it is fitted in the motorcycle.

Do not attach jump leads to the battery, touch the battery cables together or reverse the polarity of the cables as any of these actions may cause a spark which would ignite battery gases causing a risk of personal injury.

Battery Removal

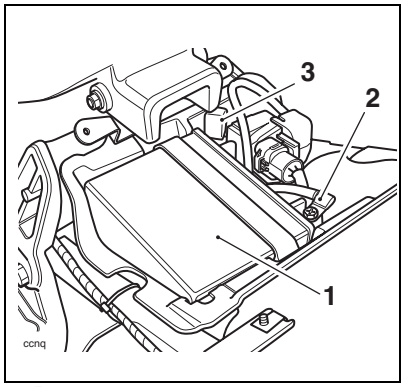

1. **Battery**
2. **Negative (black) terminal**
3. **Positive (red) terminal**

Remove the seat.

Remove the battery strap.

Disconnect the battery leads, negative (black) lead first.

Take the battery out of the case.

Warning

Ensure that the battery terminals do not touch the motorcycle frame as this may cause a short circuit or spark, which would ignite battery gases causing a risk of personal injury.

Battery Disposal

Should the battery ever require replacement, the original battery must be handed to a recycling agent who will ensure that the dangerous substances from which the battery is manufactured do not pollute the environment.

Battery Maintenance

Clean the battery using a clean, dry cloth. Be sure that the cable connections are clean.

Warning

The battery acid is corrosive and poisonous and will cause damage to unprotected skin. Never swallow battery acid or allow it to come into contact with the skin. To prevent injury, always wear eye and skin protection when handling the battery.

The battery is a sealed type and does not require any maintenance other than checking the Voltage and routine recharging when required, such as during storage.

It is not possible to adjust the battery acid level in the battery; the sealing strip must not be removed.

Battery Discharge

Caution

The charge level in the battery must be maintained to maximise battery life.

Failure to maintain the battery charge level could cause serious internal damage to the battery.

Under normal conditions, the motorcycle charging system will keep the battery fully charged. However, if the motorcycle is unused, the battery will gradually discharge due to a normal process called self discharge; the clock, engine control module (ECM) memory, high ambient temperatures, or the addition of electrical security systems or other electrical accessories will all increase this rate of battery discharge. Disconnecting the battery from the motorcycle during storage will reduce the rate of discharge.

Battery Discharge During Storage and Infrequent Use of the Motorcycle

During storage or infrequent use of the motorcycle, inspect the battery Voltage weekly using a digital multimeter. Follow the manufacturer's instructions supplied with the meter.

Should the battery Voltage fall below 12.7 Volts, the battery should be charged (see page *95*).

Allowing a battery to discharge or leaving it discharged for even a short period of time causes sulphation of the lead plates. Sulphation is a normal part of the chemical reaction inside the battery, however over time the sulphate can crystallise on the plates making recovery difficult or impossible. This permanent damage is not covered by the motorcycle warranty, as it is not due to a manufacturing defect.

Keeping the battery fully charged reduces the likelihood of it freezing in cold conditions. Allowing a battery to freeze will cause serious internal damage to the battery.

Battery Charging

For help with selecting a battery charger, checking the battery Voltage or battery charging, contact your local authorised Triumph dealer.

Warning

The battery gives off explosive gases; keep sparks, flames and cigarettes away. Provide adequate ventilation when charging or using the battery in an enclosed space.

The battery contains sulphuric acid (battery acid). Contact with skin or eyes may cause severe burns. Wear protective clothing and a face shield.

If battery acid gets on your skin, flush with water immediately.

If battery acid gets in your eyes, flush with water for at least 15 minutes and SEEK MEDICAL ATTENTION IMMEDIATELY.

If battery acid is swallowed, drink large quantities of water and SEEK MEDICAL ATTENTION IMMEDIATELY.

KEEP BATTERY ACID OUT OF THE REACH OF CHILDREN.

Caution

Do not use an automotive quick charger as it may overcharge and damage the battery.

Should the battery Voltage fall below 12.7 Volts, the battery should be charged using a Triumph approved battery charger. Always remove the battery from the motorcycle and follow the instructions supplied with the battery charger.

For extended periods of storage (beyond two weeks) the battery should be removed from the motorcycle and kept charged using a Triumph approved maintenance charger.

Similarly, should the battery charge fall to a level where it will not start the motorcycle, remove the battery from the motorcycle before charging.

Battery Installation

Warning

Ensure that the battery terminals do not touch the motorcycle frame as this may cause a short circuit or spark, which would ignite battery gases causing a risk of personal injury.

Place the battery in the battery case.

Reconnect the battery, positive (red) lead first.

Apply a light coat of grease to the terminals to prevent corrosion.

Cover the positive terminal with the protective cap.

Refit the battery strap.

Refit the seat.

Fuse Box

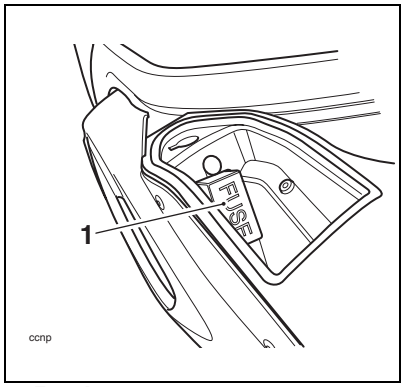

1. Fuse box

Note:

- **Numbers shown in the diagram correspond to the fuse position numbers in the table overleaf.**

The fuse box is located beneath a removable panel on the right hand side of the front fairing.

To allow access to the fuse box, insert the ignition key and remove the panel.

Warning

Always replace blown fuses with new ones of the correct rating (as specified on the fuse box cover) and never use a fuse of higher rating. Use of an incorrect fuse could lead to an electrical problem, resulting in motorcycle damage, loss of motorcycle control and an accident.

Fuse Identification

The fuses can be identified by a number moulded into the fusebox housing, adjacent to each fuse, as shown below. These numbers correspond to the numbers given in the table below. Fuses without an identification number are spare, and should be replaced if used.

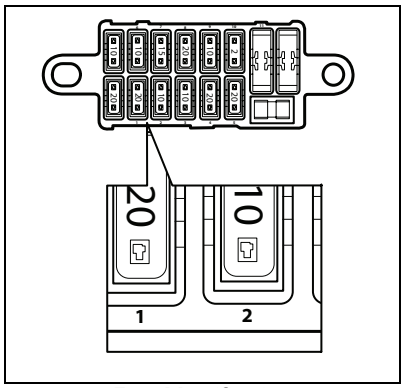

Fuse Identification

A blown fuse is indicated when all of the systems protected by that fuse become inoperative. When checking for a blown fuse, use the table below to establish which fuse has blown.

Circuit Protected	Position	Rating (Amps)
Starter solenoid, dip and main beam headlights	1	20
Ignition switch main feed, tail lights, number plate light, side lights, fuel pump	2	10
Indicators, brake light, horn	3	10
ABS only	4	20
ABS only	5	20
Accessory socket, heated grips	6	10
Cooling fan	7	15
Engine management system	8	10
Alarm, diagnostic connector, instruments	9	10
GPS	10	2

Headlights

Warning

Adjust road speed to suit the visibility and weather conditions in which the motorcycle is being operated.

Ensure that the beams are adjusted to illuminate the road surface sufficiently far ahead without dazzling oncoming traffic. An incorrectly adjusted headlight may impair visibility causing an accident.

Warning

Never attempt to adjust a headlight beam when the motorcycle is in motion.

Any attempt to adjust a headlight beam when the motorcycle is in motion may result in loss of control and an accident.

Caution

If the motorcycle is to be used under closed-course conditions, you may be asked to tape the visible outer surface of the headlight.

When taped, the headlight will overheat and distort the outer surface. Therefore, to avoid headlight distortion, always disconnect the headlights when they are taped for use under closed-course conditions.

Headlight Adjustment

Each headlight can be adjusted by means of vertical and horizontal adjustment screws located on the top and rear of each headlight.

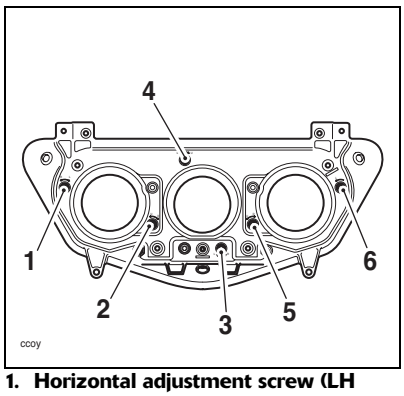

1. **Horizontal adjustment screw (LH dipped headlight)**
2. **Vertical adjustment screw (LH dipped headlight)**
3. **Horizontal adjustment screw (main beam)**
4. **Vertical adjustment screw (main beam)**
5. **Vertical adjustment screw (RH dipped headlight)**
6. **Horizontal adjustment screw (RH dipped headlight)**

Note:

- **The illustration shows a view of the rear of the lighting assembly.**
- **When turning the adjustment screws, clockwise and anti-clockwise directions are as viewed from the rear of the lighting assembly.**

Main Beam Horizontal Adjustment

The main beam horizontal adjustment screw is accessible without removing any panels. It can be reached from below the lights.

Switch the main beam on.

Turn the adjustment screw clockwise to move the beam to the left or anti-clockwise to move the beam to the right.

Switch the headlights off when the beam setting is satisfactory.

Main Beam Vertical Adjustment

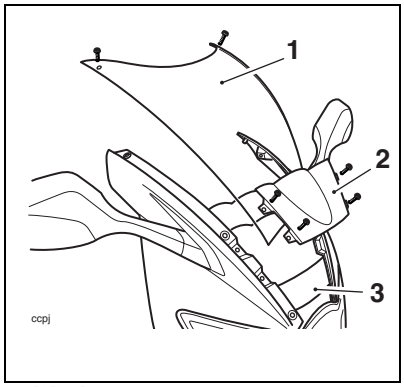

1. **Windscreen**
2. **Cover panel**
3. **Adjustment screw access**

Remove the screws securing the windscreen to the cockpit. Slide the windscreen upwards and to the rear to remove it.

Remove the screws securing the cover panel and remove the panel.

The adjustment screw is now accessible.

Switch the main beam on.

Turn the vertical adjustment screw clockwise to raise the beam or anti-clockwise to lower the beam.

Switch the headlights off when the beam setting is satisfactory.

Refit the cover panel and windscreen.

Dipped Headlight Vertical Adjustment

The dipped headlight vertical adjustment screws are accessible without removing any panels. They can be reached from below the lights on the left or right hand side. Turn the handlebars for ease of access.

Switch the headlight beam on.

Turn the vertical adjustment screws anti-clockwise to raise the beams or clockwise to lower the beams.

Switch the headlights off when the beam settings are satisfactory.

Dipped Headlight Horizontal Adjustment

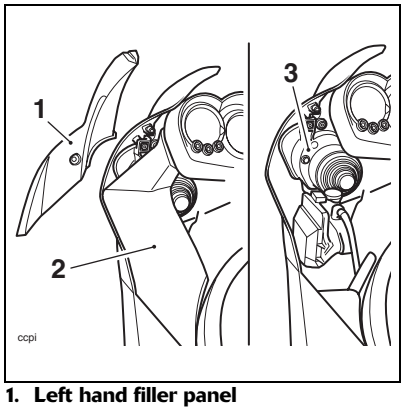

1. **Left hand filler panel**
2. **Coolant expansion tank cover**
3. **Left hand headlight adjustment screw**

Remove the left and right hand filler panels.

Remove the coolant expansion tank and stowage/fuse box cover panels. It is not necessary to remove the stowage box liner or the fuse box.

Switch the headlight dipped beam on.

The adjustment screws are now accessible.

On the right hand headlight, turn the horizontal adjustment screw clockwise to move the beam to the right, or anti-clockwise to move the beam to the left.

On the left hand headlight, turn the horizontal adjustment screw anti-clockwise to move the beam to the right, or clockwise to move the beam to the left.

Switch the headlights off when the beam settings are satisfactory.

Refit the cover and filler panels.

Dipped Headlight Bulb Replacement

It is not necessary to remove the dipped headlight when bulb replacement becomes necessary. The left and right filler panels, coolant expansion tank and stowage/fuse box cover panels do have to be removed.

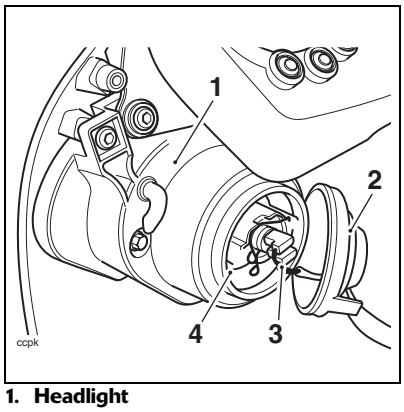

1. **Headlight**
2. **Rubber cover**
3. **Multi-pin electrical connection**
4. **Bulb retainer**

To replace a dipped headlight bulb:

Remove the seat.

Disconnect the battery, negative (black) lead first.

Remove the relevant filler and cover panels.

Remove the rubber cover and disconnect the multi-pin electrical connector from the bulb to be replaced.

Detach the wire bulb retainer from the clip. It is not necessary to undo the screw.

Remove the bulb from the headlight unit.

Installation is the reverse of the removal procedure.

Main Beam Bulb Replacement

It is necessary to remove the cockpit and the complete headlight unit when bulb replacement becomes necessary.

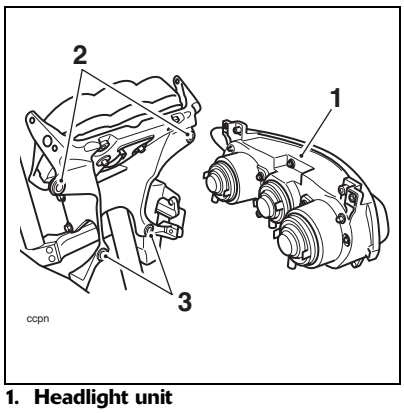

1. **Headlight unit**
2. **Side fixing**
3. **Centre fixing**

To replace a main beam bulb:

Remove the seat.

Disconnect the battery, negative (black) lead first.

Remove the cockpit.

Unscrew the nuts securing the headlight unit to the support bracket and release the unit.

Remove the rubber cover and disconnect the multi-pin electrical connector from the bulb to be replaced.

Detach the wire bulb retainer from the clip. It is not necessary to undo the screw.

Remove the bulb from the headlight unit.

Installation is the reverse of the removal procedure.

Warning

The bulbs become hot during use. Always allow sufficient time for the bulbs to cool before handling. Avoid touching the glass part of the bulb. If the glass is touched or gets dirty, clean with alcohol before re-use.

Position Lamp Bulb Replacement

The position lamp is fitted within the headlight aperture.

Carefully remove the rubber bulb holder from the back of the position lamp and detach the bulb.

Installation is the reverse of the removal procedure.

Caution

Ensure that the bulb holder is correctly fitted to prevent water ingress.

Warning

When reconnecting the battery, connect the positive (red) lead first.

Warning

Do not reconnect the battery until the assembly process has been completed. Premature battery reconnection could result in ignition of the battery gases causing risk of injury.

Rear Light

The rear light unit is a sealed, maintenance free LED unit.

Warning

Riding the motorcycle with defective brake lights is illegal and dangerous. In the event of failure of the LED unit, consult your authorised Triumph dealer.

An accident causing injury to the rider and other road users may result from use of a motorcycle with defective brake lights.

Direction Indicator Lights

Front Indicator Bulb Replacement

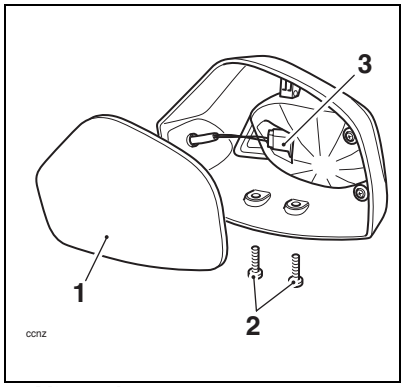

1. **Mirror glass**
2. **Securing screws**
3. **Bulb holder**

Release the screws on the underside of the mirror shell and remove the mirror glass to gain access to the bulb holder.

Caution

Support the mirror glass in case it falls out when releasing the screws.

Carefully remove the rubber bulb holder and detach the bulb.

Installation is the reverse of the removal procedure.

Rear Indicator Bulb Replacement

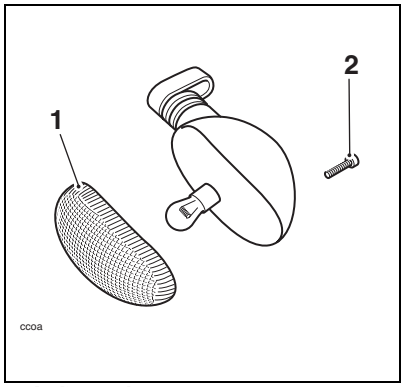

1. **Indicator lens**
2. **Lens screw**

The lens on each indicator light is held in place by a screw located in the body of the light.

Release the screws and remove the lens to gain access to the bulb for replacement.

Installation is the reverse of the removal procedure.

Licence Plate Light

Bulb Replacement

Carefully remove the rubber bulb holder from the back of the licence plate light unit and remove the bulb.

Caution

To avoid cable damage, do not pull the bulb holder using the cables.

Installation is the reverse of the removal procedure.

Caution

Ensure that the bulb holder is correctly fitted to prevent water ingress.

Cleaning

Frequent, regular cleaning is an essential part of the maintenance of your motorcycle. If regularly cleaned, the appearance will be preserved for many years. Cleaning with cold water containing an automotive cleaner is essential at all times but particularly so after exposure to sea breezes, sea water, dusty or muddy roads and in winter when roads are treated for ice and snow. Do not use household detergent, as the use of such products will lead to premature corrosion.

Although, under the terms of your motorcycle warranty, cover is provided against the corrosion of certain items, the owner is expected to observe this reasonable advice which will safeguard against corrosion and enhance the appearance of the motorcycle.

Preparation for Washing

Before washing, precautions must be taken to keep water off the following places:

Rear opening of the exhausts: Cover with a plastic bag secured with rubber bands.

Clutch and brake levers, switch housings on the handlebar: Cover with plastic bags.

Ignition switch and steering lock: Cover the keyhole with tape.

Remove any items of jewellery such as rings, watches, zips or belt buckles, which may scratch or otherwise damage painted or polished surfaces.

Use separate cleaning sponges or cleaning cloths for washing painted/polished surfaces and chassis areas. Chassis areas (such as wheels and under mudguards) will be exposed to more abrasive road grime and dust, which may then scratch painted or polished surfaces, if the same sponge or cleaning cloths are used.

Where to be Careful

Avoid spraying water with any great force near the following places:

- Instruments;
- Brake cylinders and brake calipers;
- Under the fuel tank;
- Drive chain;
- Headstock bearings.

Caution

Do not spray any water at all under the rider's seat. The rider's seat has the engine's air intake ducts fitted to its base and any water sprayed in this area could enter the airbox and engine, causing damage to both items.

Caution

Use of high-pressure spray washers is not recommended. When using pressure washers, water may be forced into bearings and other components causing premature wear from corrosion and loss of lubrication.

Note:

- **Use of soaps that contain high levels of alkaline will leave a residue on painted surfaces, and may also cause water spotting. Always use a low alkaline soap to aid the cleaning process.**

After Washing

Remove the plastic bags and tape, and clear the air intakes.

Lubricate the pivots, bolts and nuts.

Test the brakes before motorcycle operation.

Start the engine and run it for 5 minutes. Ensure adequate ventilation for the exhaust fumes.

Use a dry cloth to absorb water residue. Do not allow water to stand on the machine as this will lead to corrosion.

Warning

Never wax or lubricate the brake discs. Loss of braking power and an accident could result. Clean the disc with a proprietary brand of oil-free brake disc cleaner.

Unpainted Aluminium Items

Items such as brake and clutch levers must be correctly cleaned to preserve their appearance.

Use a proprietary brand of aluminium cleaner which does not contain abrasive or caustic elements.

Clean aluminium items regularly, in particular after use in inclement weather, where the components must be hand washed and dried each time the machine is used.

Warranty claims due to inadequate maintenance will not be allowed.

Cleaning of the Exhaust System

All parts of the exhaust system of your motorcycle must be cleaned regularly to avoid a deterioration of its appearance. These instructions can be applied to chrome, brushed stainless steel and carbon fibre components alike.

Note:

- **The exhaust system must be cool before washing to prevent water spotting.**

Washing

Prepare a mixture of cold water and mild automotive cleaner. Do not use a highly alkaline soap as commonly found at commercial car washes because it leaves a residue.

Wash the exhaust system with a soft cloth. Do not use an abrasive scouring pad or steel wool. They will damage the finish.

Rinse the exhaust system thoroughly.

Ensure no soap or water enters the exhausts.

Drying

Dry the exhaust system as far as possible with a soft cloth. Do not run the engine to dry the system or spotting will occur.

Protecting

When the exhaust system is dry, rub 'Motorex 645 Clean and Protect' into the surface.

Caution

The use of products containing silicone will cause discolouration of the chrome and must not be used. Similarly, the use of abrasive cleaners and polishes will damage the system and must not be used.

It is recommended that regular protection be applied to the system as this will both protect and enhance the system's appearance.

STORAGE

Preparation for Storage

Clean the entire vehicle thoroughly.

Fill the fuel tank with the correct grade of unleaded fuel and add a fuel stabiliser (if available), following the fuel stabiliser manufacturer's instructions.

Warning

Petrol is extremely flammable and can be explosive under certain conditions. Turn the ignition switch off. Do not smoke. Make sure the area is well ventilated and free from any source of flame or sparks; this includes any appliance with a pilot light.

Remove the spark plug from each cylinder and put several drops (5 ml) of engine oil into each cylinder. Cover the spark plug holes with a piece of cloth or rag. With the engine stop switch in the RUN position, push the starter button for a few seconds to coat the cylinder walls with oil. Install the spark plugs, tightening to **12 Nm**.

Change the engine oil and filter (see page *69*).

Check and if necessary correct the tyre pressures (see page *112*).

Set the motorcycle on a box or stand so that both wheels are raised off the ground. (If this cannot be done, put boards under the front and rear wheels to keep dampness away from the tyres.)

Spray rust inhibiting oil (there are a host of products on the market and your dealer will be able to offer you local advice) on all unpainted metal surfaces to prevent rusting. Prevent oil from getting on rubber parts, brake discs or in the brake calipers.

Lubricate and if necessary adjust the drive chain (see page *77*).

Make sure the cooling system is filled with a 50% mixture of anti-freeze and distilled water solution (see page *110*).

Remove the battery, and store it where it will not be exposed to direct sunlight, moisture, or freezing temperatures. During storage it should be given a slow charge (one ampere or less) about once every two weeks (see page *94*).

Store the motorcycle in a cool, dry area, away from sunlight, and with a minimum daily temperature variation.

Put a suitable porous cover over the motorcycle to keep dust and dirt from collecting on it. Avoid using plastic or similar non-breathable, coated materials that restrict air flow and allow heat and moisture to accumulate.

Storage

Preparation after Storage

Install the battery (if removed) (see page *96*).

If the motorcycle has been stored for more than four months, change the engine oil (see page *69*).

Check all the points listed in the Daily Safety Checks section.

Before starting the engine, remove the spark plugs from each cylinder.

Put the side stand down.

Crank the engine on the starter motor several times until the oil pressure light goes out.

Replace the spark plugs, tightening to **12 Nm**, and start the engine.

Check and if necessary correct the tyre pressures (see page *112*).

Check the brakes for correct operation.

Test ride the motorcycle at low speeds.

SPECIFICATIONS

Dimensions

Overall Length	2,114 mm (83.2 in)
Overall Width	745 mm (29.3 in)
Overall Height:	
Tall Screen	1,215 mm (47.8 in)
Wheelbase	1,457 mm (57.4 in)
Seat Height	805 mm (31.7 in)

Weights

Dry Weight	210 kg (462 lbs)
Maximum Payload	215 kg (473 lbs)

Engine

Type	In-line 3 cyl.
Displacement	1050 cc
Bore x Stroke	79 x 71.4 mm
Compression Ratio	12,0:1
Cylinder Numbering	Left to Right
Cylinder Sequence Number	1 at left
Firing Order	1-2-3
Starting System	Electric Starter

Specifications

Performance

Maximum Power*	126.5 PS (124.7 bhp) at 9,250 rpm
Maximum Torque	104 Nm (77 ft.lbf) at 5,000 rpm

Lubrication

Forced Lubrication (Wet sump)

Cooling

Coolant Type	Mobil Antifreeze
Water/Anti-freeze ratio	50/50
Coolant Capacity	2.3 litres
Thermostat Opens (nominal)	85 - 88°C

Fuel System

Type	Electronic Fuel Injection
Injectors	Twin Jet Solenoid Operated Plate Valve
Fuel Pump	Submerged Electric
Fuel Pressure	2.94 bar (nominal)

Fuel

Type	95 RON unleaded
Steel Fuel Tank Capacity	20 litres

* DIN 70020

Ignition

Ignition System	Digital Inductive
Electronic Rev Limiter (r/min)	9,500 (r/min)
Spark Plug	NGK CR9EK
Spark Plug Gap	0.7 mm
Gap Tolerance	+0.05/-0.1 mm

Transmission

Transmission Type	6 Speed, Constant Mesh
Clutch Type	Wet, Multi-Plate
Final Drive Chain	DID X-Ring Endless
Primary Drive Ratio	1.750 (105/60)
Gear Ratios:	
Final Drive Ratio	2.211 (19/42)
1st	2.733 (15/41)
2nd	1.947 (19/37)
3rd	1.545 (22/34)
4th	1.292 (24/31)
5th	1.154 (26/30)
6th	1.074 (27/29)

Tyres

Tyre Pressures (Cold):

Front	36 psi (2.5 bar)
Rear	42 psi (2.9 bar)

Approved tyres/sizes:

Option 1

Front	Bridgestone BT020 120/70ZR17
Rear	Bridgestone BT020 U 180/55ZR17

Option 2

Front	Bridgestone BT020 NN 120/70ZR17
Rear	Bridgestone BT020 NN 180/55ZR17

Option 3

Front	Metzeler Roadtec Z6 120/70ZR17
Rear	Metzeler Roadtec Z6C 180/55ZR17

Warning

Use the recommended tyres ONLY in the combinations given. Do not mix tyres from different manufacturers or mix different specification tyres from the same manufacturers as this may result in loss of motorcycle control and an accident.

Electrical Equipment

Battery	12 Volt, 10 Ah
Alternator	12 Volt, 35 Amp
Headlight	3 x 12 Volt, 55 watt H7 halogen
Tail/Brake Light	LED display
Directional Indicator Lights	12 Volt, 10 watt

Frame

Rake	24°
Trail	90 mm

Tightening Torques

Oil Filter	10 Nm
Oil Drain Plug	25 Nm
Spark Plug	12 Nm
Rear Wheel Eccentric Clamp Bolt	55 Nm

Fluids and Lubricants

Engine Oil	Semi or fully synthetic 10W/40 or 15W/50 motorcycle engine oil which meets specification API SH (or higher) and JASO MA, such as Mobil 1 Racing 4T
Brake and Clutch Fluid	Mobil Universal Brake and Clutch Fluid DOT 4
Coolant	Mobil Antifreeze
Bearings and Pivots	Mobil Grease HP 222
Drive Chain	Mobil Chain Spray or Mobilube HD 80

This page intentionally left blank

INDEX

B

Battery 93
- Disposal 94
- Installation 95
- Maintenance 94

Brakes 80
- Brake and Clutch Lever Adjusters . . 29
- Brake Pad Wear Compensation 80
- Brake Wear Inspection 80
- Disc Brake Fluid 81
- Fluid Level 82
- Light Switches 83

C

Cleaning 104
- After Washing 105
- Drying 106
- Exhaust System 105
- Preparation 104
- Protecting 106
- Unpainted Aluminium Items 105
- Washing 106
- Where to be Careful 104

Clock/Trip Computer 21

Clutch 75
- Adjustment 76
- Inspection 76

Cooling System 70, 110
- Coolant Change 72
- Corrosion Inhibitors 70
- Level Adjustment 72
- Level Inspection 71
- Radiator Hoses 73
- Temperature Gauge 23

D

Dimensions 109

Drive Chain 76
- Chain Lubrication 77
- Movement Adjustment 78
- Movement Inspection 77
- Wear Inspection 79

E

Electrical Equipment 113

Engine
- Serial Number 15
- Specifications 109
- To Start the Engine 46
- To Stop the Engine 46

Engine Oil 67
- Disposal of Used Oil and Filters 70
- Oil Level Inspection 67
- Specification and Grade 70

F

Fluids and Lubricants 113

Frame 113

Fuel 110

Fuel Gauge 24

Fuel Requirement 32
- Filling the Fuel Tank 33
- Fuel Grade 32
- Fuel Tank Cap 33

Fuel System 110

Fuse Box 96
- Fuse Identification 97

G

Gears
- Changing Gears 48

Index

H

Headlights 98
- Adjustment 98
- Dipped Headlight Adjustment . 99, 100
- Dipped Headlight Replacement . . . 100
- Main Beam Adjustment 99
- Main Beam Replacement 101
- Position Lamp Bulb Replacement . . . 101

I

Ignition 111
- Key 27
- Switch/Steering Lock 28

Instrument Panel Layout 19

L

Lubrication 110

O

Odometer/Trip Meter 20

P

Pannier System 37
Parts Identification 12
Performance 110

R

Rear Light 102
Right Handlebar Switches 30
- Engine Stop Switch 30

S

Safety 5
- Fuel and Exhaust Fumes 5
- Handlebars and Footrests 7
- Helmet and Clothing 7
- Maintenance/Equipment 9
- Motorcycle 5
- Parking 8
- Parts and Accessories 8
- Riding 6

Speedometer 20
Storage 107
- Preparation after Storage 108
- Preparation for Storage 107

T

Tachometer 20
Tightening Torques 113
Transmission 111
Tyres 112

V

Vehicle Identification Number 15

W

Warnings
- Warning Label Locations 10
- Warning Labels 2
- Warning Lights 25
- Warnings, Cautions and Notes 1

Weights 109